10.Maintenance and cleaning

It is absolutely essential that the fixture is kept clean and that dust, dirt and smoke-fluid residues must not build up on or within the fixture. Otherwise, the fixture‘s light-output will be significantly reduced. Regular cleaning will not only ensure the maximum light-output, but will also allow the fixture to function reliably throughout its life.A soft lint-free cloth moistened with any good glass cleaning fluid is recommended, under no circumstances should alcohol or solvents be used!

DANGER !
Disconnect from the mains before starting any maintenance work

The front objective lens will require weekly cleaning as smoke-fluid tends to building up residues, reducing the light-output very quickly. The cooling-fans should be cleaned monthly.

The interior of the fixture should be cleaned at least annually using a vacuum-cleaner or an air-jet. Dichroic colour filters, CMY lamellas, gobo and graphic wheels and the internal lenses should be cleaned monthly. Remove dust and dirt from the fans and cooling vents using a soft brush and vacuum-cleaner.

Important! Check the air filters periodically and clean before they become clogged!

Clean two air filters placed in the fixture’s covers and two in the fixture base. Use a vacuum cleaner, compressed air or you can wash them and put back dry.

After replacing the air filters, reset the elapsed time counter in the menu "Information" (Information--->Air Filters--->Elapsed Time).

Replacing the fuse. Before replacing the fuse, unplug mains lead.

1) Remove the fuse holder on the rear panel of the base with a fitting screwdriver from the housing (anti-clockwise).
2) Remove the old fuse from the fuse holder.
3) Install the new fuse in the fuse holder (only the same type and rating).
4) Replace the fuseholder in the housing and fix it.

technologies

FOS NOX PRO

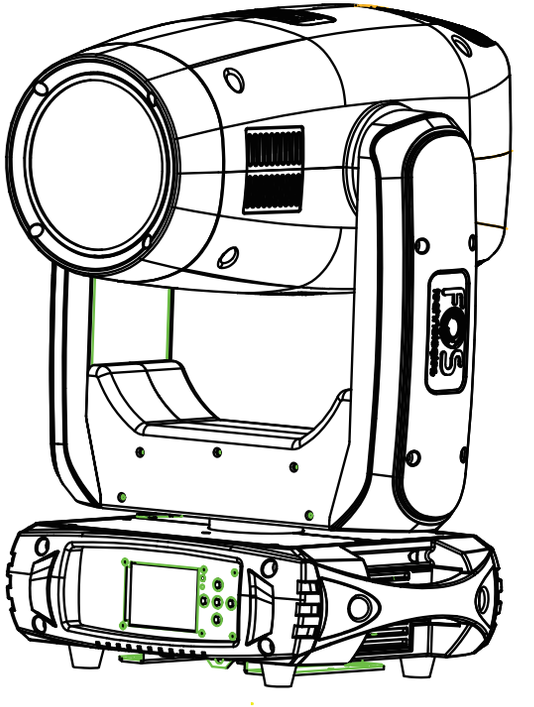

Version 1.0

USER MANUAL

- Be sure to read the USER MANUAL carefully before using this product.
- Be sure to keep the USER MANUAL properly for future needs.
- Use this product correctly when you can fully understand the User Manual

1.Safety instructions

Thank you for choosing our FOS NOX PRO. FOR YOUR OWN SAFETY, PLEASE READ THIS USER MANUAL CAREFULLY

BEFORE YOU INITIAL START - UP!

CAUTION!
Be careful with your operations.
With a high voltage you can suffera dangerous electric shock when touching the wires!

This device has left our premises in absolutely perfect condition. In order to maintain this condition and to ensure a safe operation, it is absolutely necessary for the user to follow the safety instructions and warning notes written in this manual.

CAUTION!
Keep this device away from rain and moisture!
Unplug mains lead before opening the housing!

Important:

The manufacturer will not accept liability for any resulting damages caused by the non-observance of this manual or any unauthorized modification to the device.

Please consider that damages caused by manual modifications to the device are not subject to warranty.

During the operation the housing becomes hot). Allow the fixture to cool approximately 20 minutes prior to manipulate with it.

Make sure that the available voltage is not higher than stated on the rear panel.

WARNING! This unit does not contain an ON/OFF switch. Always disconnect power input cable to completely remove power from unit when not in use or before cleaning or servicing the fixture.

Make sure that the power-cord is never crimped or damaged by sharp edges. Check the device and the power-cord from time to time.

Always disconnect from the mains, when the device is not in use or before cleaning it. Only handle the power-cord by the plug. Never pull out the plug by tugging the power cord.

This device falls under protection class I. Therefore it is essential to connect the yellow/green conductor to earth.

The electric connection, repairs and servicing must be carried out by a qualified employee.

Do not connect this device to a dimmer pack.

Do not switch the fixture on and off in short intervals as this would reduce the lamp's life.

During the initial start-up some smoke or smell may arise. This is a normal process and does not necessarily mean that the device is defective.

Do not touch the device's housing bare hands during its operation (housing becomes hot)!

For replacement use lamps and fuses of same type and rating only.

CAUTION ! EYE DAMAGES !
Avoid looking directly into the light source
(meant especially for epileptics) !

11	9		Cyan
		0..255	Cyan 0%...100%
12	10		Magenta
		0..255	Magenta 0%...100%
13	11		Yellow
		0..255	Yellow 0%...100%
14	12		CTO
		0..255	CTO 0%...100%
15	13		Focus
		0..255	In(near) to out(far)
16	14		Zoom
		0..255	In(near) to out(far)
17	15		Prism
		0..5	PrismOFF
		6..127	Prism1 ON
		128..255	Prism2 ON
18	16		Rrotating Prism
		0..127	Prismrotation stop
		128..189	Forwardsrotationfromfasttoslow
		190..193	Prismrotation stop
		194..255	Forwards rotation from slow to fast
19	17		Iris
		0..191	Max.diametertoMin.diameter
		192..223	Pulse opening fast to slow
		224..255	Pulse closing slow to fast
20	18		Frost
		0..199	Frost OFF
		200..255	Frost ON
21	19		Speed pan/tile
		0..225	maxtominspeed
		226..235	blackout bymovement
		236..245	blackout by all wheel changing
		246..255	nofunction
22	20		Specialfunction
		0..19	Nofunction
		20..29	Nofunction
		30..39	Nofunction
		40..79	Nofunction
		80..84	AllMotorreset
		85..87	Scan motor reset
		88..90	Colors motor reset
		91..93	Gobo motor reset
		94..96	Nofunction
		97..99	Other motor reset
		100..119	Internal program 1
		120..139	Internal program 2
		140..159	Internal program 3
		160..179	Internal program 4
		180..199	Internal program 5
		200..219	Internal program 6
		220..239	Internal program 7
		240..255	Internal Sound program1

6	4	100..119	Gobo2 shakeslowtofast
		120..139	Gobo3 shakeslowtofast
		140..159	Gobo4 shakeslowtofast
		160..179	Gobo5 shakeslowtofast
		180..199	Gobo6 shakeslowtofast
		200..219	Gobo7 shakeslowtofast
		220..255	Rot. gobo wheel cont. rotation slow to fast
7	5		Gobo 1 rotation
		0..127	Goboindexing
		128..189	Forwards gobo rotation from fast to slow
		190..193	Gobo rotation stop
		194..255	Backwards gobo rotation from slow to fast
8	6		Gobo wheel 2
		0..9	Holewithspot
		10..19	Gobo1
		20..29	Gobo2
		30..39	Gobo3
		40..49	Gobo4
		50..59	Gobo5
		60..69	Gobo6
		70..79	Gobo7
		80..89	Gobo8
		90..99	Gobo9
		100..109	Gobo10
		110..119	Gobo11
		120..129	Gobo1 shakeslowtofast
		130..139	Gobo2 shakeslowtofast
		140..149	Gobo3 shakeslowtofast
		150..159	Gobo4 shakeslowtofast
		160..169	Gobo5 shakeslowtofast
		170..179	Gobo6 shakeslowtofast
		180..189	Gobo7 shakeslowtofast
		190..199	Gobo8shakeslowtofast
		200..209	Gobo9 shakeslowtofast
		210..219	Gobo10 shakeslowtofast
		220..229	Gobo11 shakeslowtofast
		230..255	Gobowheelrotationfromslowtofast
9	7		Shutter
		0..31	Shutter closed
		32..63	shutter open
		64..95	Strobe effectslowtofast
		96..127	shutter open
		128..159	Pulse-effectinsequencesslowtofast
		160..191	shutter open
		192..223	Random strobe effect slow to fast
		224..255	shutter open
10	8		Dimmer
		0..255	Dimmer0%...100%

2.UNPACKING

The FOS NOX PRO adopts a 500W white LED lamp which features high brightness and stability. Please carefully unpack it when you receive the fixture and check whether it is damaged during the transportation. And please check whether the following items are included inside the box:

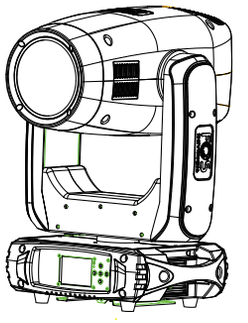

▲ *Moving Head *1*

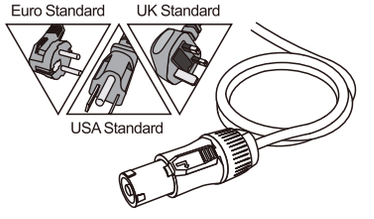

▲ *Power Cable*1*



▲ *User Manual*1*

▲ *Hanging Kit *2*

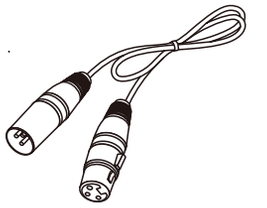

▲ *Signal Cable *1*

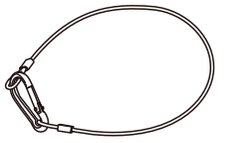

▲ *Safety Cable*1*

The FOS NOX PRO is made of a new type of high temperature strength of engineering plastics and cast aluminum casing with nice outlook . The fixture is designed and manufactured strictly following CE standards, complying with international standard DMX512 protocòl. It s available independently controlled and linkable with each other for operation. And it is applicable for large-scale live per formances, theater, studio, nightclubs and discos.

This manual covers the important information on installation and applications. Meanwhile, please keep this manual well for future needs.

3.TECHNICAL INFORMATION

SPECIFICATIONS:

- 1*500W white led lamp, 6500K , 50000 hours life span.
- Input Voltage:AC90-260V 50/60Hz
- Power Consumption: 524W
- Control Signal:DMX512 , master-slave and sound activated or auto operation (8 built-in programs)
- Control Channel: 22/20 DMX channels USITT DMX-512.
- Dimensions: 389 (D)*269(W)*670(H)mm
- Packing Dimensions:550(D)*465(W)*655(H)mm
- Net Weight: 25.4kgs
- Gross Weight: 28.4kgs

FEATURES:

- Low power consumption
- Zoom Range: 4~32°static gobo;6~48°rotatable gobo
- 2 m-20m electric focus
- 4-Facet prism &8-Facet prism and frost filter with variable speed and direction
- 0-100% Linear LED dimmer
- Aperture effect: 5% -100% adjustment of the focal length.
- DMX512, master-slave and sound activated or auto operation
- 25T/sec high speed LED shutter/strobe effect with variable speed
- Preset variable/random strobe and dimming pulse effect
- 2,8" TFT LCD touch display (320*240pix) with 4 control buttons
- Powercon IN/OUT
- 3-Pin XLR connectors IN/OUT
- Pan/tilt lock
- IP20 protection rating
- 55dB at 3'dB rating
- 2*1/4 turn fastening Omega clamps
- 1* Safety attachment point

MOVEMENT:

- 8/16 bit smooth and precise resolution for PAN/TILT movement
- 540°/630°/360°/ PAN and 270°/180°/90° TILT movement

COLORS:

- 1 Color wheel with 5 colors plus open

GOBOS:

- 1 Static gobo wheel with 11 gobos plus open
- 1 Rotatable gobo wheel with 7 rotatable and interchangeable glass gobos plus open with speed adjustable, stream effect, dithering effect and rotatable clockwise or anticlockwise
- Rotatable gobo wheel can be Gobo indexing
- Gobo overlay (gobo morphing)

FUNCTION:

- Improved optics and flat beam field
  Variable direction rainbow effect with speed adjustable
- Fan cooling system
  Constant temperature readout and management function
- -35°C ~ 45°C max ambient temperature

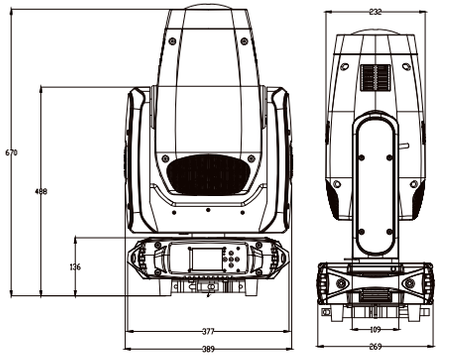

Gobo Wheel&Color Wheel





CMY+CTO Wheel

0%	Cyan	100%
0%	Magenta	100%
0%	Yellow	100%
0%	CTO	100%

FOS technologies
FOS NOX PRO Product Datasheet

9.DMX PROTOCOL

Mode/Channel		Value	Function
22CH	20CH		
1	1		Pan
		0..255	PAN Movement
2			Pan-fine
		0..255	Finecontrobf Panmovement
3	2		Tilt
		0..255	TiltMovement
4			Tile-fine
		0..255	Finecontrobf Tiltmovement
5	3		Color wheel
		0..19	Open/ white
		20..39	Red
		40..59	Blue
		60..79	Green
		80..99	Lightyellow
		100..127	Orange
		128..189	Forwards rainbow effect from fast toslow
		190-193	Colorrotationstop
		194..255	Backwards rainbow effect fromslow tofast
5	3		Color wheel (Mode2)
		0..9	Open/ white
		10..19	White+Red
		20..29	Red
		30..39	Red+ Blue
		40..49	Blue
		50..59	Blue+ Green
		60..69	Green
		70..79	Green+ Lightyellow
		80..89	Light yellow
		90..99	Light yellow+ Orange
		100..109	Orange
		110..127	Orange+White
		128..189	Forwards rainbow effect from fast toslow
		190-193	Colorrotation stop
		194..255	Backwards rainbow effect fromslow tofast
6	4		Gobo wheel 1
		0..9	Open
		10..19	gobo1
		20..29	gobo2
		30..39	gobo3
		40..49	gobo4
		50..59	gobo5
		60..69	gobo6
		70..79	gobo7
		80..99	Gobo1 shakeslow fast

8.MENU OPERATIONS

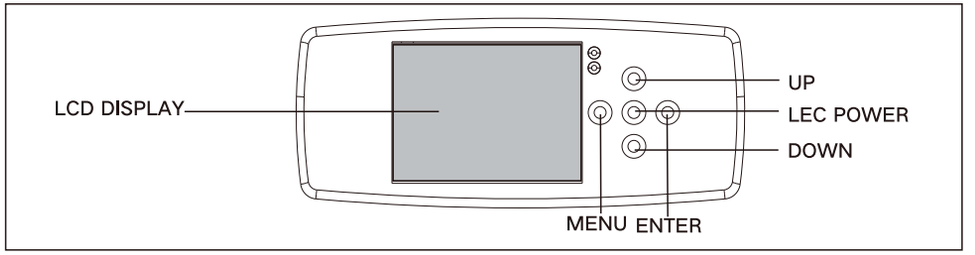

MENU		Description		
Function Mode	Dmx Address	A001~AXXX		DMX address setting
	Channel Mode	CH22 CH20		22CH mode 20CH mode
	Auto Run	Internal Program1~9	Master/Alone	Auto run
	Music Control	Internal Program1~9	Master/Alone	Sound control
Option	Reset Default	Yes/No		Reset Default
	Signal Set	Wire DMX Wireless DMX Act WDMX & Out		Wire DMX Wireless DMX Act WDMX & Out
	Reverse Pan Reverse Tilt Select Pan Select Tilt	(On/Off) (On/Off) 630°/540°/360° 270°/180°/90°		Reverse Pan Reverse Tilt Select Pan Select Tilt
	Mic sensitivity	0~99%		Mic sensitivity
	OFF Signal Mode	(On/Off)		OFF at original status and ON at Reset status when no DMX
	Half Color Wheel	(On/Off)		Half Color Wheel
	Touch Control	(On/Off)		Touch Control
	Scan Faset Mode	(On/Off)		Scan Faset Mode
Manual	Channel	PAN=XXX……		Manual control
Information	Temperature	XXX°C/°F		Current Temperature
	Software Version	V1.0~V9.9		Software Version
Reset	Total Reset			Total Reset
	Pan/Tilt Reset			Pan/Tilt Reset
	Color Reset			Color Reset
	Gobo Reset			Gobo Reset
	The Others Reset			The Others Reset
ADVANCED (Access Code 088)	Calibration	PAN=XXX……		Calibration
	UID Code	XX XX XX XX XX XX		UID Code

Special button instruction: press “Up”and “DOWN”at the same time for 3 second, display up side down; press“DOWN”and “Enter”at the same time for 3 second, change Chinese and English menu.

4.PHOTOMETRICS DIAGRAM

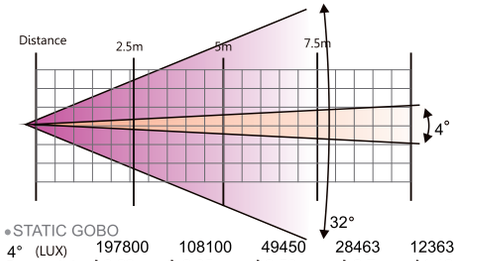

•STATIC GOBO

4° (LUX)	197800	108100	49450	28463	12363
Diameter(m)	Φ0.29	Φ 0.35	Φ0.53	Φ 0.7	Φ1.16
32° (LUX)	5865	1610	862	529	380
Diameter(m)	Φ 1.73	Φ3.46	Φ5.18	Φ6.9	Φ8.6

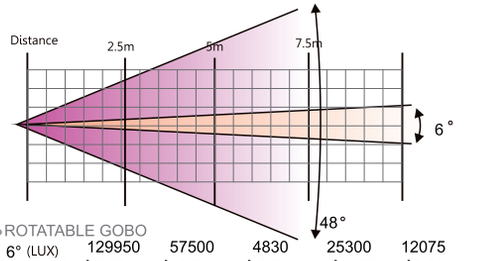

•ROTATABLE GOBO

6° (LUX)	129950	57500	4830	25300	12075
Diameter(m)	Φ0.32	Φ 0.5	Φ0.51	Φ 0.72	Φ0.94
48° (LUX)	5578	1553	851	518	374
Diameter(m)	Φ 1.68	Φ3.36	Φ5.04	Φ6.7	Φ8.4

5.OPERATION INSTRUCTIONS

- The FOS NOX PRO is for spot effect for on-site decoration purpose.
- Don’t turn on the fixture if it’s been through severe temperature difference like after transportation because it might damage the light due to the environment changes. So make sure to operate the fixture until it is in normal temperature.
- This light should be keep away from strong shaking during any transportation or movement.
- Don’t pull up the light by only the head, or it might cause damages to the mechanical parts.
- Don’t expose the fixture in overheat, moisture or environment with too much dust when installing it. And
- don’t lay any power cables on the floor. Or it might cause electronic shock to the people.
- Make sure the installation place is in good safety condition before installing the fixture.
- Make sure to put the safety chain and check whether the screws are screwed properly when installing the fixture.
- Make sure the lens are in good condition.It’s recommended to replace the units if there are any damages or severe scratch.
- Make sure the fixture is operated by qualified personnel who knows the fixture before using.
- Keep the original packages if any second shipment is needed.
- Don’t try to change the fixtures without any instruction by the manufacturer or the appointed repairing agencies.
- It is not in warranty range if there are any malfunctions from not following the user manual to operate or any illegal operation, like shock short circuit, electronic shock , lamp broke, etc.

6.INSTALLATIONS

Cautions:

For added protection mount the fixtures in areas outside walking paths, seating areas, or in areas were the fixture might be reached by unauthorized personnel.
Before mounting the fixture to any surface, make sure that the installation area can hold a minimum point load of 10 times the device's weight.
Fixture installation must always be secured with a secondary safety attachment, such as an appropriate safety cable.
Never stand directly below the device when mounting, removing, or servicing the fixture.
from a ceiling, or set on a flat level surface (see illustration below). Be sure this fixture is kept at least 0.5m (1.5 f t) away from any flammable materials (decoration etc.).
Always use and install the supplied safety cable as a safety measure to prevent accidental damage and/or injury in the event the clamp fails.

Mounting points:

Overhead mounting requires extensive experience, including amongst others calculating working load limits, a fine knowledge of the installation material being used, and periodic safety inspection of all installation material and the fixture. If you lack these qualifications, do not attempt the installation yourself. Improper installation can result in bodily injury.
Be sure to complete all rigging and installation procedures before connecting the main power cord to the appropriate wall outlet.

Clamp Mounting:

FOS NOX PROprovides a unique mounting bracket assembly that integrates the bottom of the base, and the safety cable rigging point in one unit (see the illustration below). When mounting this fixture to truss be sure to secure an appropriately rated clamp to the included omega bracket using a M10 screw fitted through the center hole of the "Hanging Kit". As an added safety measure be sure to attached at least one properly rated safety cable to the fixture using on of the safety cable rigging point integrated in the base assembly .

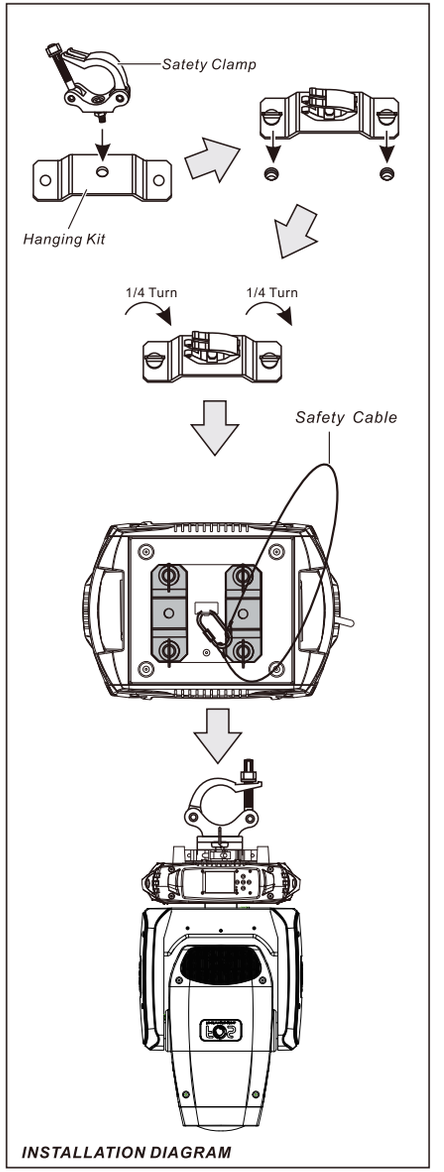

INSTALLATION DIAGRAM

7.CONTROL CONNECTION

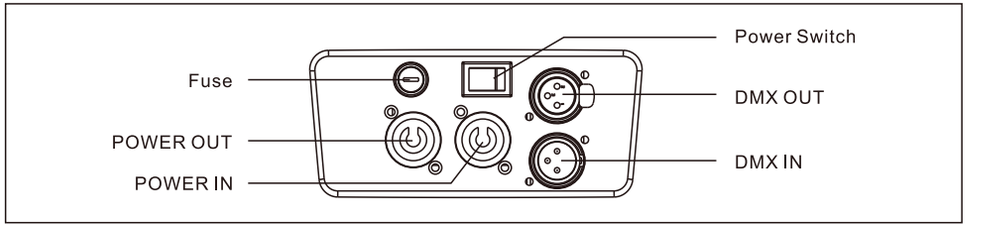

Connect the provided XLR cable to the female 3-pin XLR output of your controller and the other side to the male 3-pin XLR input of the moving head. You can chain multiple Moving head together through serial linking. The cable needed should be two core, screened cable with XLR input and output connectors. Please refer to the diagram below. DMX-512 connection with DMX terminator.

For installations where the DMX cable has to run a long distance or is in an electrically noisy environment, such as in a discotheque, it is recommended to use a DMX terminator. This helps in preventing corruption of the digital control signal by electrical noise. The DMX terminator is simply an XLR plug with a3 resistor connected between pins 2 and 3,which is then plugged into the output XLR socket of the last fixture in the chain. Please see illustrations below.

