FOS technologies

FOS HYDOR PROFILE
USER MANUAL



Safety Information



WARNING

Please keep this User Manual for future consultation. If you sell the unit to another user, be sure that they also receive this instruction manual.

Important:
Damages caused by the disregard of this user manual are not subject to warranty.
The dealer will not accept liability for any resulting defects or problems.
•Unpack and check carefully to ensure that there is no transportation damage before using the unit.
•DO install and operate by qualified operator.
•DO NOT allow children to operate the fixture.
•Use safety chain when fixing the unit. Handle the unit by carrying its base instead of head only.
•The unit must be installed in a location with adequate ventilation, at least 50CM from adjacent surfaces.
•Be sure that no ventilation slots is blocked, otherwise the unit will be overheated.
•Before operation, ensure that you are connecting this product to the proper voltage in accordance with the specifications in this manual or on the product's specification label.
•It's important to ground the yellow/green conductor to earth in order to avoid electric shock.
•Minimum ambient temperature TA: 0℃. Maximum ambient temperature TA: 40℃.Do not operate this product at a lower or higher temperature.
•DO NOT connect the device to any dimmer pack.
•Keep flammable materials away from the fixture while operating to avoid fire hazard.
•Make sure the power cord is not crimped or damaged; replace it immediately if damaged.
•Unit's surface temperature may reach up to 65℃. DO NOT touch the housing bare-handed during its operation.
•Avoid any flammable liquids, water or metal from entering the unit. Once it happens, cut off the mains power immediately.
•DO NOT operate in a dirty or dusty environment. DO clean the fixture regularly.
•DO NOT touch any wire during operation as there might be a hazard of electric shock.
•Avoid entanglement of the power cord with other wires.
•The minimum distance to objects/surface must be more than 5 meters.
•Disconnect mains power before fuse replacement or servicing.
•Replace fuse only with the same type.
•In the event of serious operating problem, stop using the unit immediately.
•Never turn on and off the unit time after time.
•The housing, the lenses, or the ultraviolet filter must be replaced if they are visibly damaged.
•DO NOT open the housing as there are no user serviceable parts inside.
•DO NOT attempt to operate this unit if it becomes damaged. DO NOT attempt any repairs yourself. Repairs carried out by unskilled people can lead to damage or malfunction. Please contact the nearest authorized technical assistance center if needed.
•Disconnect this product from its power source before servicing.
•DO use the original packaging if the device is to be transported.
•Check that the head tilt lock is released before packing for transportation.
•Avoid direct eye exposure to the light source while the product is on.
•DO NOT operate this product if you see damage on the housing, shields, or cables. Have the damaged parts replaced by an authorized technician at once.

1.Technical Specifications

1.1 Parameter

LIGHT SOURCE
Light Source:800W LED Engine
Total Lumen Output of engine:5,2500 lumens
Color Temperature Output of Fixture:7,000K
Life Expectancy:20,000 hours

ELECTRICAL AND CONNECTORS
Rated Input Voltage: AC 100-240V~ 50/60 Hz
Total Power Consumption: 970W
Power Factor: ≥0.97
Input Current: 4.5A @ 220V
LED Lifespan: ≥20,000 hoursPower In/Out:Waterproof power connector in/out
Data In/Out:3-pin or 5-pin waterproof XLR, RJ45 connector

OPTICAL SYSTEM
Beam Angle: 5°–45°
Light Source: Single 800W LED
Luminous Flux: 31500Lm

CONTROL
4 touch button control panel
Display:LCD display
Protocols:DMX512,RDM,Art-Net,sACN
Control Channels:42CH/32S CH/32F CH/23CH

PATTERN SYSTEM
Rotating Gobo Wheel: 7 patterns + 1 open, quick-swappable (Ø20mm outer / Ø15mm inner, 1.1mm thickness)
Static Gobo Wheel: 8 patterns + 1 open
Animation Wheel:1 slot,continuous bidirectional rotation

PRISM
4-facet prism + 4-line prism, combinable with simultaneous rotation
Shutter/Cutting System
4 independent blades for fast and smooth cuts
Individual control of blade direction and angle, full blackout capable per blade
Full module rotation: ±60°

COLORS
Color Temperature: 7000K
CRI: Ra72 (High-Brightness Mode) / Ra95 (High-CRI Mode)
Color Wheel: 5 colors + CRI filter + 1 open
CMY + CTO Mixing: CTO range 2700K–7000K

PAN&TILT
Pan: 540°, Tilt: 260°, 8/16-bit precision

EFFECT
High-Speed E-Strobe: 1–25 Hz
LED Refresh Rate: 400 Hz–24 kHz
Frost: Medium diffusion
Iris Range: 2.2–45°

PHYSICAL INFORMATION
Dimensions:
358×240×672 mm (Quick-lock hook version)
358×240×692 mm (Integrated hook version)
Weight: 30 kg (Quick-lock)
31.5 kg (Integrated hook)
IP Rating: IP65

1.2 Gobos and Wheels

Rotating Gobos

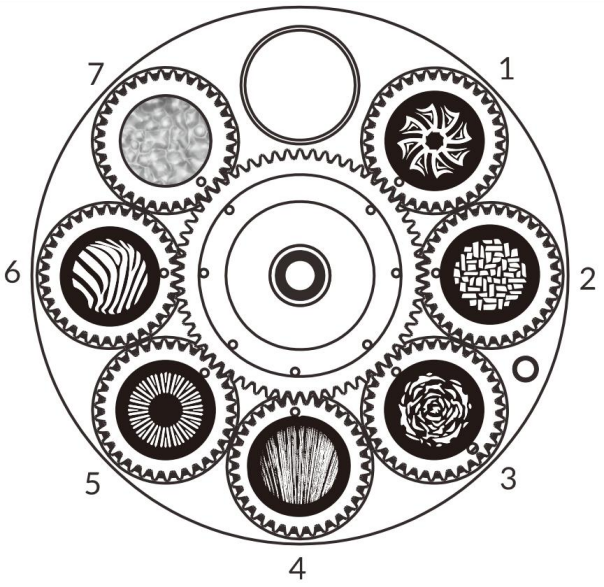

Fixed Gobos

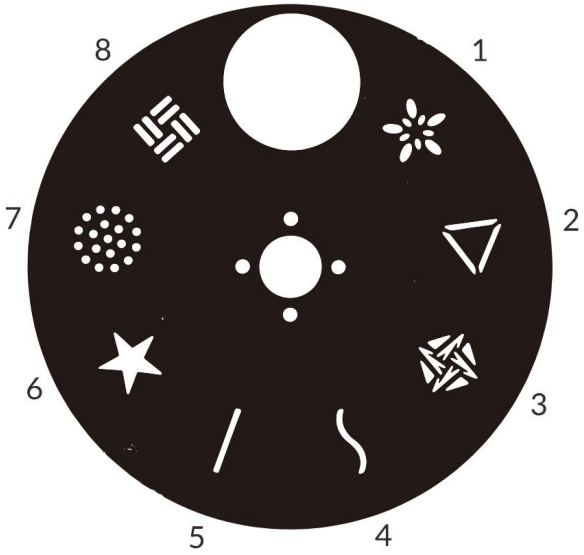

Effects Wheels



Color Wheels

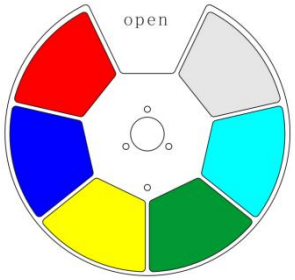

Prism System

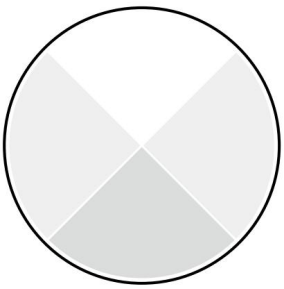

4 facet Prism

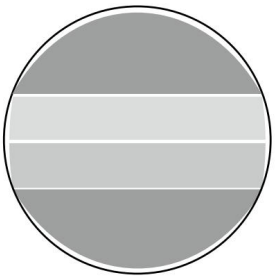

4-Row Mirrors

CMY Wheels

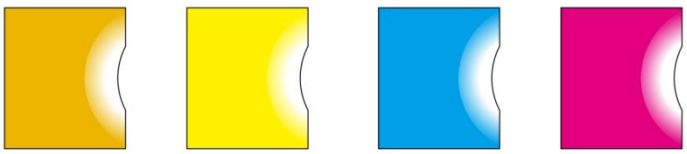

2.Dimension and Photometric Diagram

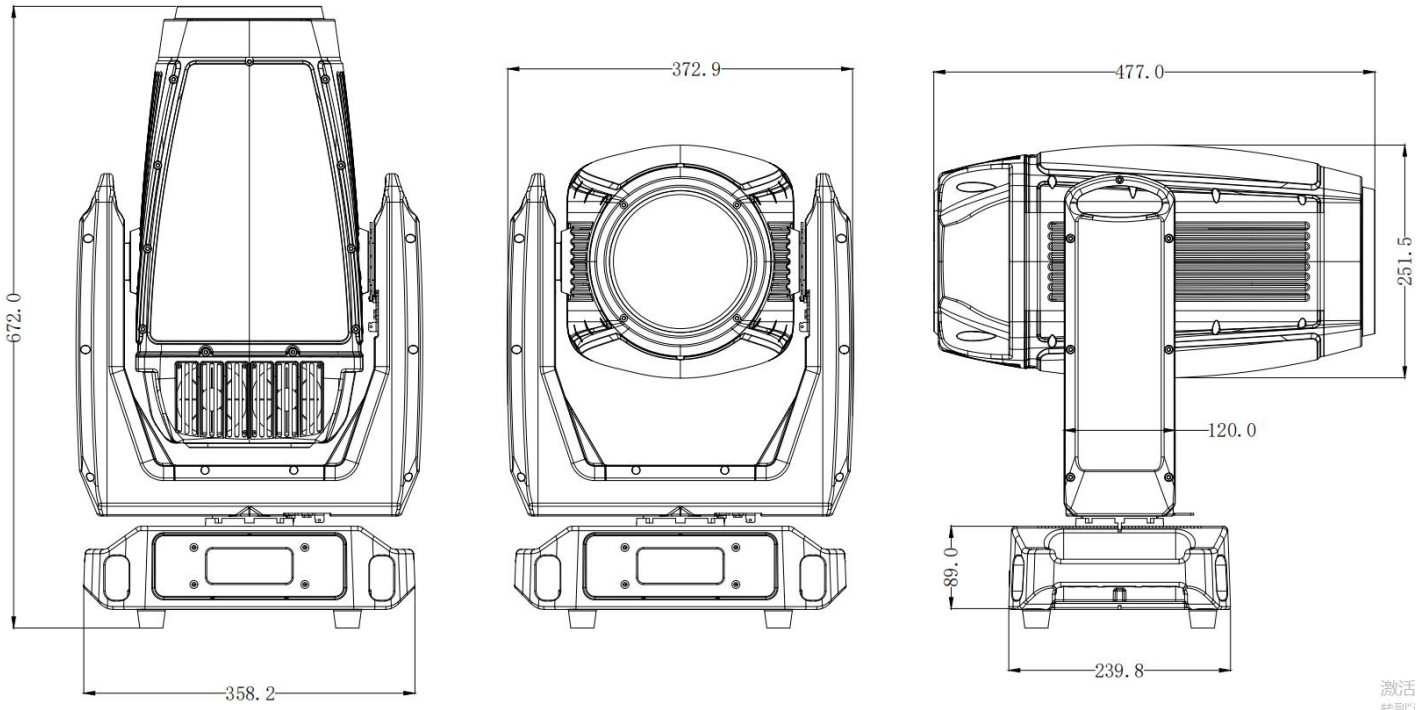

600BSWF Small Angle				
Lux	121000	46100	18900	13200
		4.5°		
Distance	5m	8m	10m	15m
Diameter	0.40m	0.64m	0.83m	1.25m

600BSWF Big Angle				
Lux	2250	804	504	266
		50°		
Distance	5m	8m	10m	15m
Diameter	4.53m	7.35m	9.10m	13.5m

3.Overview

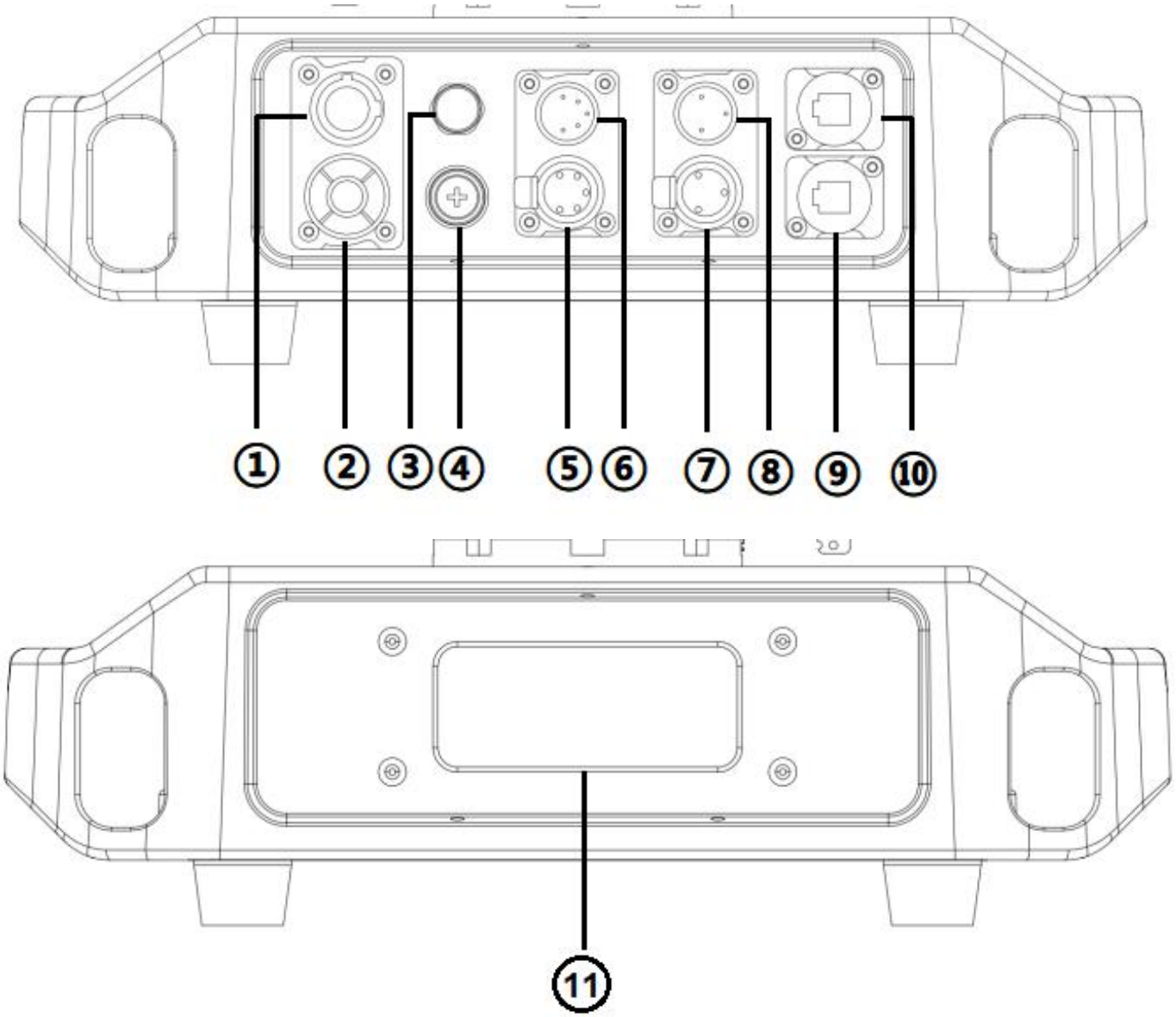

（1）Seetronic Power In
（2）Seetronic Power Out
（3）Valve
（4）Fuse
（5）5 Pin DMX Out
（6）5 Pin DMX In
（7）3 Pin DMX Out
（8）3 Pin DMX In
（9）Ethernet Out
（10）Ethernet In
（11）Display

4. Fixture Installation

•DO install and operate by qualified operator. Fixture(s) should be installed in areas outside walking paths, seating areas, or away from areas were unauthorized personnel might reach the fixture by hand. NEVER stand directly below the fixture(s) when rigging, removing or servicing.

•Always ensure that the unit is firmly fixed to avoid vibration and slipping off during operation. Ensure that the trussing or area of installation must be able to hold 10 times the weight without any deformation. Always attach a safety cable that can hold at least 12 times the weight of the fixture whenever installing this fixture in a suspended environment to ensure that the fixture will not fall if the clamp fails.

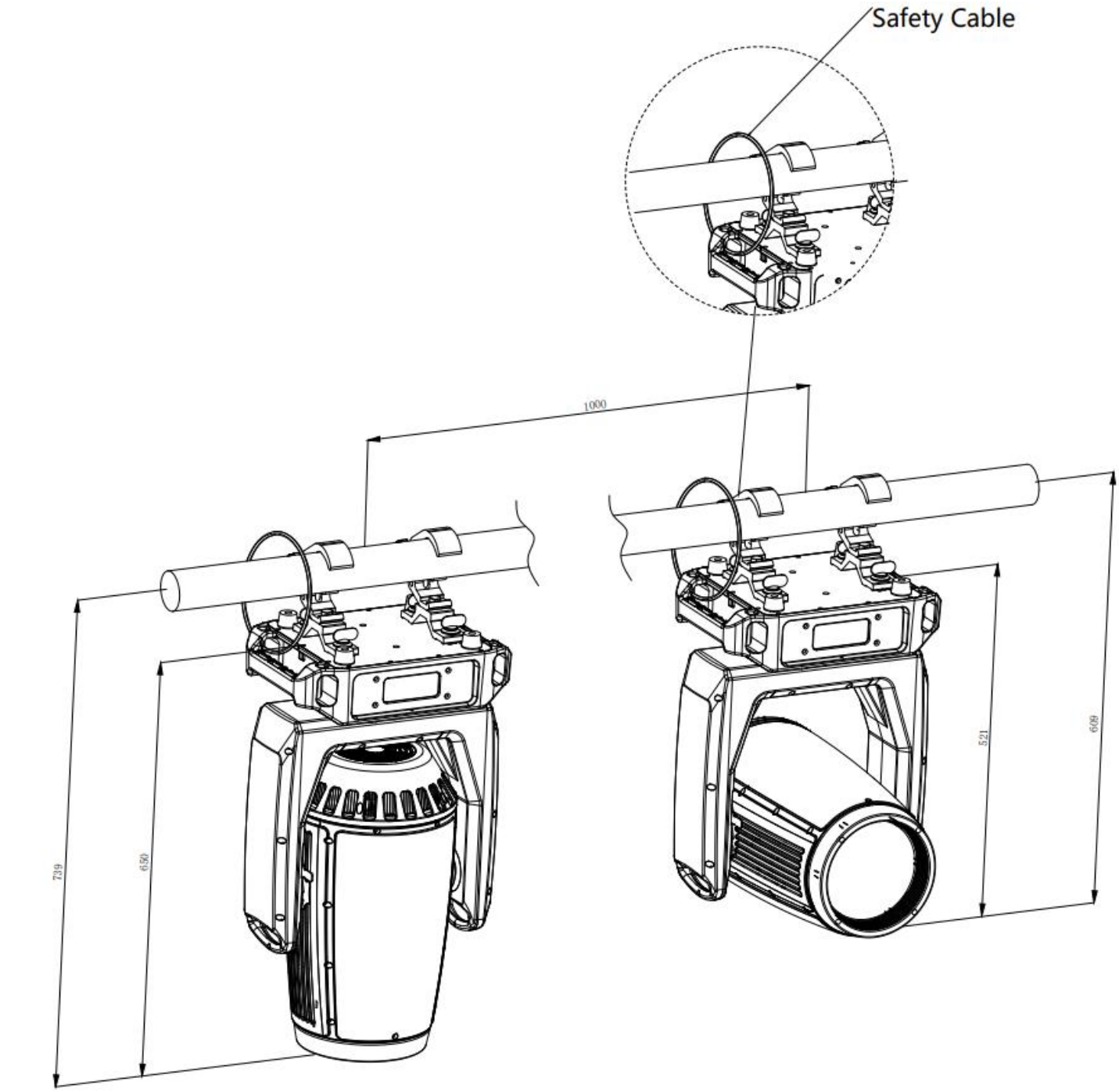

4.1 Steps for installing omega brackets

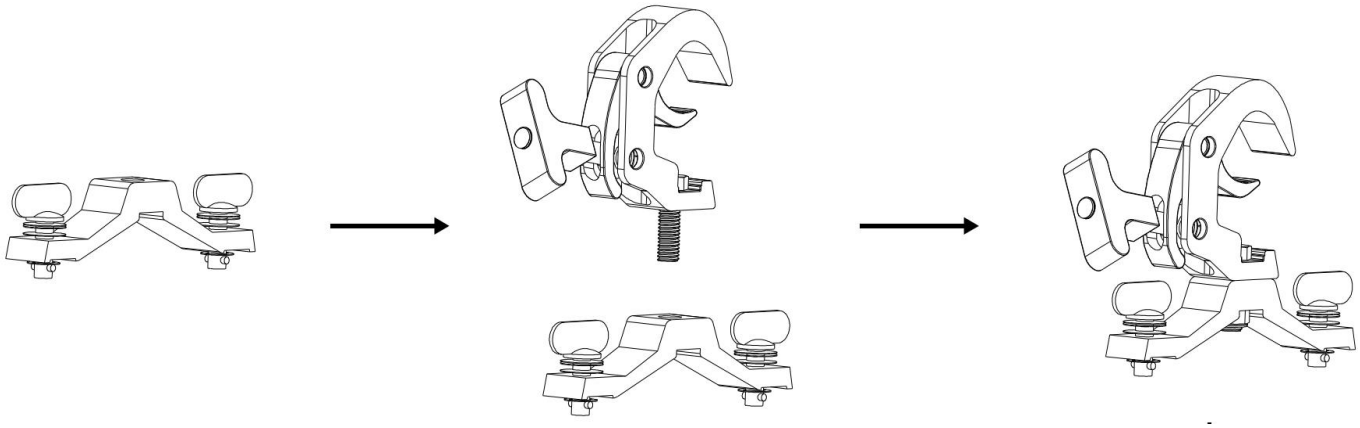

Omega Bracket Attachment Points

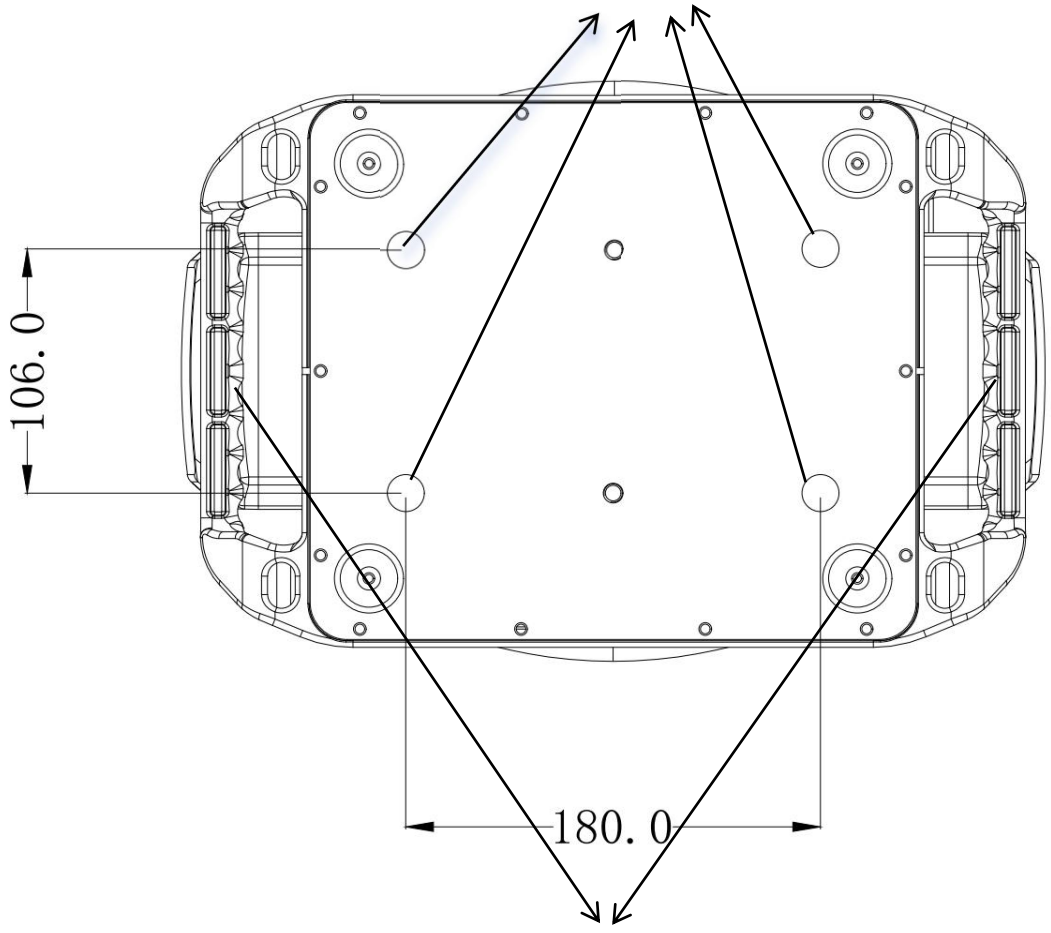

Safety Cable Attachment Points

5. Control Menu

Address	001-512		
Channel Mode	23CH		
	32S CH		
	32F CH		
	42 CH		
Setting	Control Mode	DMX	
		ArtNet	
		sACN	
		Auto Test	
	ArtNet to 512	No/Yes	
	Status Setting	Signal Keep	No/Yes
		Invert Pan	No/Yes
		Invert Tilt	No/Yes
		Move Light	No/Yes
		Pan&Tilt	No/Yes
		Power Set	High/Low power
	Dimmer Curve	Linear	
		Square	
		I-Square	
		S-Shape	
	Dimmer Speed	Fast	
		Smooth	
	Dimmer Frequency	400Hz / 1200Hz / 2000Hz / 4000Hz 6000Hz / 8000Hz / 16KHz / 24KHz	8000Hz as default
	Fan Mode	Auto	
		Silent	
		Full	
		Ultra Silent	
	Display Setting	Screen Backlight	On/10s/30s/1min
		Invert Screen	Off/On
		Screen Lock	No/Yes
		Language	Chinese/English
	Calibration	Pan	001-255
		Tilt	001-255
		...	
		Focus Rot 1~7	001-255
	Load Default	No/Yes	
Network	Network	Ethernet	IP:002.000.000.001
			MS:255.000.000.000
			OK
		Universe	Net(0-127):000
			Sub-Uni:000
Manual	Pan	0-255	
	Pan Fine	0-255	
	Tilt	0-255	
	Tilt Fine	0-255	
	P-T Speed	0-255	
	Cyan	0-255	
	Magenta	0-255	
	Yellow	0-255	
	...	...	
	Marco	0-255	
Reset	Reset Effect		
	Reset Scan		
	Reset All		

6. DMX Channel

23 Channel Mode

CH	FUNCTION	VALUE	Description
1	Pan	0-255	0°→ 540°
2	Pan Fine	0-255	16 Bit Adjustable
3	Tilt	0-255	0°→ 270°
4	Tilt Fine	0-255	16 Bit Adjustable
5	PAN/TILT Speed	0-255	Fast to Slow
6	Cyan	0-255	0-100%
7	Magenta	0-255	0-100%
8	Yellow	0-255	0-100%
9	CTO	0-255	0-100%
10	CRI	0-127	CRI Filter Out
		128-255	CRI Filter In
11	Color Wheel	000 - 005	WHITE
		006 - 115	White light → Color 1.. Color 6 → White light Linear movement
		116 - 120	WHITE
		121 - 130	Color 1
		131 - 140	Color 2
		141 - 150	Color 3
		151 - 160	Color 4
		161 - 170	Color 5
		171 - 192	WHITE
		193 - 223	Color wheel reverses from fast to slow
		224 - 224	STOP
		225 - 255	The color wheel rotates from slow to fast
12	Color Wheel Fine	0-255	0-100%
13	Iris	000 - 225	Iris from large to small
		226 - 235	Iris slow open fast close from slow to fast
		236 - 245	Iris slow close fast open from slow to fast
		246 - 255	Iris slow close fast open from slow to fast
14	Iris Fine	0-255	0-100%
15	Frost 1	0-127	Frost 1 Off
		128-255	Frost 1 On
16	Zoom	0-255	From wide to narrow
17	Zoom Fine	0-255	0-100%
18	Focus	0-255	0-100%
19	Focus Fine	0-255	0-100%
20	Strobe	0-3	Close

		4-99	Synchronized Strobe
		100-149	Pulse Strobe
		150-199	Flash Strobe
		200-249	Random Strobe
		250-255	Open
21	Dimmer	0-255	0-100%
22	Dimmer Fine	0-255	0-100%
23	Macro	000 - 005	No function
		006 - 020	Horizontal reverse open
		021 - 025	Horizontal reverse close
		026 - 030	Vertical reverse open
		031 - 035	Vertical reverse close
		036 - 040	Mobile light blocking ON
		041 - 045	Mobile light blocking OFF
		046 - 050	No function
		051 - 055	Fan set to auto mode
		056 - 060	Fan set to high speed mode
		061 - 065	Fan set to high Silent mode
		066 - 070	Fan set to ultra-quiet mode
		071 - 075	Curve Linear
		076 - 080	Curve Square
		081 - 085	Curve Inv Square
		086 - 090	Curve S
		091 - 095	400Hz
		096 - 100	1200Hz
		101 - 105	2000Hz
		106 - 110	4000Hz
		111 - 115	6000Hz
		116 - 120	8000Hz
		121 - 125	16KHz
		126 - 130	24KHz
		131 - 135	Display backlight on
		136 - 140	Display backlight for 15 s
		141 - 145	Display backlight for 30 s
		146 - 150	Display backlight for 60 s
		151 - 155	Dimmer Speed Smooth
		156 - 160	Dimmer Speed Fast
		161 - 165	Reset Pan/Tilt
		166 - 170	Reset Moving Head
		171 - 175	Reset All
		176 - 180	Signal Keep on
		181 - 185	Signal Keep off
		186 - 255	No function

32S Channel Spot Mode

CH	FUNCTION	VALUE	Description
1	Pan	0-255	0°→ 540°
2	Pan Fine	0-255	16 Bit Adjustable
3	Tilt	0-255	0°→ 270°
4	Tilt Fine	0-255	16 Bit Adjustable
5	PAN/TILT Speed	0-255	Fast to Slow
6	Cyan	0-255	0-100%
7	Magenta	0-255	0-100%
8	Yellow	0-255	0-100%
9	CTO	0-255	0-100%
10	CRI	0-127	CRI Filter Out
		128-255	CRI Filter In
11	Color Wheel	000 - 005	WHITE
		006 - 115	White light → Color 1.. Color 6 → White light Linear movement
		116 - 120	WHITE
		121 - 130	Color 1
		131 - 140	Color 2
		141 - 150	Color 3
		151 - 160	Color 4
		161 - 170	Color 5
		171 - 192	WHITE
		193 - 223	Color wheel reverses from fast to slow
		224 - 224	STOP
		225 - 255	The color wheel rotates from slow to fast
12	Color Wheel Fine	0-255	0-100%
13	Gobo wheel	0-7	White light
		8-20	Gobo 1
		21-33	Gobo 2
		34-46	Gobo 3
		47-59	Gobo 4
		60-72	Gobo 5
		73-85	Gobo 6
		86-98	Gobo 7
		99-111	Gobo 1 shakes from slow to fast
		112-124	Gobo 2 shakes from slow to fast
		125-137	Gobo 3 shakes from slow to fast
		138-150	Gobo 4 shakes from slow to fast
		151-163	Gobo 5 shakes from slow to fast
		164-176	Gobo 6 shakes from slow to fast
		177-189	Gobo 7 shakes from slow to fast
		190-221	Counterclockwise flow from fast to slow
		222-223	Stop water flow
		224-255	Clockwise flow from slow to fast
14	Gobo wheel Rotate	0-127	Slide, 0-360°
		128-190	Counterclockwise rotation, from fast to slow
		191-192	STOP
		193-255	Rotate clockwise, from slow to fast
15	Gobo wheel Rotate Fine	0-255	0-100%

16	Pattern	0-5	White light
		6-16	Pattern 1
		17-27	Pattern 2
		28-38	Pattern 3
		39-49	Pattern 4
		50-60	Pattern 5
		61-71	Pattern 6
		72-82	Pattern 7
		83-93	Pattern 8
		94-105	Pattern 1 shakes from slow to fast
		106-117	Pattern 2 shakes from slow to fast
		118-129	Pattern 3 shakes from slow to fast
		130-141	Pattern 4 shakes from slow to fast
		142-153	Pattern 5 shakes from slow to fast
		154-165	Pattern 6 shakes from slow to fast
		166-177	Pattern 7 shakes from slow to fast
		178-189	Pattern 8 shakes from slow to fast
		190-221	Counterclockwise flow from fast to slow
		222-223	Stop water flow
		224-255	Clockwise flow from slow to fast
17	Pattern Effect	0-7	Open
		7-63	Slide, 0-360°
		64-126	Counterclockwise rotation, from fast to slow
		127-128	Stop
		129-191	Rotate clockwise, from slow to fast
		192-255	Effect pattern rotates back and forth, from slow to fast
18	IRIS	000 - 225	Iris from large to small
		226 - 235	Iris slow open fast close from slow to fast
		236 - 245	Iris slow close fast open from slow to fast
		246 - 255	Iris slow close fast open from slow to fast
19	Iris Fine Adjustment	0-255	0-100%
20	Prism 1	0-7	Prism 1 cut out
		8-255	Prism 1 cut in
21	Prism 1 Rotate	0-127	Slide, 0-360°
		128-189	Counterclockwise rotation, from fast to slow
		190-193	STOP
		194-255	Rotate clockwise, from slow to fast
22	Prism 2	0-7	Prism 2 cut out
		8-255	Prism 2 cut in
23	Prism 2 Rotate	0-127	Slide, 0-360°
		128-189	Counterclockwise rotation, from fast to slow
		190-193	STOP
		194-255	Rotate clockwise, from slow to fast
24	Frost 1	0-127	Frost 1 cut out
		128-255	Frost 1 cut in
25	Zoom	0-255	Wide to Narrow

26	Zoom Fine	0-255	0-100%
27	Focus	0-255	0-100%
28	Focus Fine	0-255	0-100%
29	Strobe	0-3	Close
		4-99	Synchronized Strobe
		100-149	Pulse Strobe
		150-199	Flash Strobe
		200-249	Random Strobe
		250-255	Open
30	Dimmer	0-255	0-100%
31	Dimmer Fine	0-255	0-100%
32	Macro	000 - 005	No function
		006 - 020	Horizontal reverse open
		021 - 025	Horizontal reverse close
		026 - 030	Vertical reverse open
		031 - 035	Vertical reverse close
		036 - 040	Mobile light blocking ON
		041 - 045	Mobile light blocking OFF
		046 - 050	No function
		051 - 055	Fan set to auto mode
		056 - 060	Fan set to high speed mode
		061 - 065	Fan set to high Silent mode
		066 - 070	Fan set to ultra-quiet mode
		071 - 075	Curve Linear
		076 - 080	Curve Square
		081 - 085	Curve Inv Square
		086 - 090	Curve S
		091 - 095	400Hz
		096 - 100	1200Hz
		101 - 105	2000Hz
		106 - 110	4000Hz
		111 - 115	6000Hz
		116 - 120	8000Hz
		121 - 125	16KHz
		126 - 130	24KHz
		131 - 135	Display backlight on
		136 - 140	Display backlight for 15 s
		141 - 145	Display backlight for 30 s
		146 - 150	Display backlight for 60 s
		151 - 155	Dimmer Speed Smooth
		156 - 160	Dimmer Speed Fast
		161 - 165	Reset Pan/Tilt
		166 - 170	Reset Moving Head
		171 - 175	Reset All
		176 - 180	Signal Keep on
		181 - 185	Signal Keep off
		186 - 255	No function

32F Channel F-Wash Mode

CH	FUNCTION	VALUE	Description
1	Pan	0-255	0°→ 540°
2	Pan Fine	0-255	16 Bit Adjustable
3	Tilt	0-255	0°→ 270°
4	Tilt Fine	0-255	16 Bit Adjustable
5	PAN/TILT Speed	0-255	Fast to Slow
6	Cyan	0-255	0-100%
7	Magenta	0-255	0-100%
8	Yellow	0-255	0-100%
9	CTO	0-255	0-100%
10	CRI	0-127	CRI Filter Out
		128-255	CRI Filter In
11	Color Wheel	000 - 005	WHITE
		006 - 115	White light → Color 1.. Color 6 → White light Linear movement
		116 - 120	WHITE
		121 - 130	Color 1
		131 - 140	Color 2
		141 - 150	Color 3
		151 - 160	Color 4
		161 - 170	Color 5
		171 - 192	WHITE
		193 - 223	Counter-Clockwise Rotation, Fast to Slow
		224 - 224	STOP
		225 - 255	Clockwise Rotation, Slow to Fast
12	Color Wheel Fine	0-255	0-100%
13	Iris	000 - 225	Iris from large to small
		226 - 235	Iris slow open fast close from slow to fast
		236 - 245	Iris slow close fast open from slow to fast
		246 - 255	Iris slow close fast open from slow to fast
14	Iris Fine	0-255	0-100%
15	Frost 1	0-127	Frost 1 Off
		128-255	Frost 1 On
16	Zoom	0-255	Wide to Narrow
17	Zoom Fine	0-255	0-100%
18	Focus	0-255	0-100%
19	Focus Fine	0-255	0-100%
20	Strobe	0-3	Close
		4-99	Synchronized Strobe
		100-149	Pulse Strobe
		150-199	Flash Strobe
		200-249	Random Strobe
		250-255	Open

21	Dimmer	0-255	0-100%
22	Dimmer Fine	0-255	0-100%
23	BLADE Rotate	0-255	0°-180°
24	BLADE UP 1	0-255	Blade Up A 0%-100%
25	BLADE UP 2	0-255	Blade Up B 0%-100%
26	BLADE LF 1	0-255	Blade Left A 0%-100%
27	BLADE LF 2	0-255	Blade Left B 0%-100%
28	BLADE DW 1	0-255	Blade Down A 0%-100%
29	BLADE DW 2	0-255	Blade Down B 0%-100%
30	BLADE RG 1	0-255	Blade Right A 0%-100%
31	BLADE RG 2	0-255	Blade Right B 0%-100%
32	Macro	000 - 005	No function
		006 - 020	Horizontal reverse open
		021 - 025	Horizontal reverse close
		026 - 030	Vertical reverse open
		031 - 035	Vertical reverse close
		036 - 040	Mobile light blocking ON
		041 - 045	Mobile light blocking OFF
		046 - 050	No function
		051 - 055	Fan set to auto mode
		056 - 060	Fan set to high speed mode
		061 - 065	Fan set to high Silent mode
		066 - 070	Fan set to ultra-quiet mode
		071 - 075	Curve Linear
		076 - 080	Curve Square
		081 - 085	Curve Inv Square
		086 - 090	Curve S
		091 - 095	400Hz
		096 - 100	1200Hz
		101 - 105	2000Hz
		106 - 110	4000Hz
		111 - 115	6000Hz
		116 - 120	8000Hz
		121 - 125	16KHz
		126 - 130	24KHz
		131 - 135	Display backlight on
		136 - 140	Display backlight for 15 s
		141 - 145	Display backlight for 30 s
		146 - 150	Display backlight for 60 s
		151 - 155	Dimmer Speed Smooth
		156 - 160	Dimmer Speed Fast
		161 - 165	Reset Pan/Tilt
		166 - 170	Reset Moving Head
		171 - 175	Reset All
		176 - 180	Signal Keep on
		181 - 185	Signal Keep off
		186 - 255	No function

42 Channel Mode

CH	FUNCTION	VALUE	Description
1	Pan	0-255	0°→ 540°
2	Pan Fine	0-255	16 Bit Adjustable
3	Tilt	0-255	0°→ 270°
4	Tilt Fine	0-255	16 Bit Adjustable
5	PAN/TILT Speed	0-255	Fast to Slow
6	Cyan	0-255	0-100%
7	Magenta	0-255	0-100%
8	Yellow	0-255	0-100%
9	CTO	0-255	0-100%
10	CRI	0-127	CRI Filter Out
		128-255	CRI Filter In
11	Color Wheel	000 - 005	WHITE
		006 - 115	Color Wheel Indexing
		116 - 120	WHITE
		121 - 130	Color 1
		131 - 140	Color 2
		141 - 150	Color 3
		151 - 160	Color 4
		161 - 170	Color 5
		171 - 192	WHITE
		193 - 223	Counter-Clockwise Rotation, Fast to Slow
		224 - 224	STOP
		225 - 255	Clockwise Rotation, Slow to Fast
12	Color Wheel Fine	0-255	0-100%
13	Gobo	0-7	White light
		8-20	Gobo 1
		21-33	Gobo 2
		34-46	Gobo 3
		47-59	Gobo 4
		60-72	Gobo 5
		73-85	Gobo 6
		86-98	Gobo 7
		99-111	Gobo 1 shakes from slow to fast
		112-124	Gobo 2 shakes from slow to fast
		125-137	Gobo 3 shakes from slow to fast
		138-150	Gobo 4 shakes from slow to fast
		151-163	Gobo 5 shakes from slow to fast
		164-176	Gobo 6 shakes from slow to fast
		177-189	Gobo 7 shakes from slow to fast
		190-221	Counterclockwise flow from fast to slow
		222-223	Stop water flow
		224-255	Clockwise flow from slow to fast

14	Gobo Rotate	0-127	Index 0°- 360°
		128-190	Counter-Clockwise Rotation, Fast to Slow
		191-192	Stop
		193-255	Clockwise Rotation, Slow to Fast
15	GOBO Rotate Fine	0-255	0-100%
16	Pattern	0-5	White color
		6-16	Gobo 1
		17-27	Gobo 2
		28-38	Gobo 3
		39-49	Gobo 4
		50-60	Gobo 5
		61-71	Gobo 6
		72-82	Gobo 7
		83-93	Gobo 8
		94-105	Gobo 1 Shaking, Slow to Fast
		106-117	Gobo 2 Shaking, Slow to Fast
		118-129	Gobo 3 Shaking, Slow to Fast
		130-141	Gobo 4 Shaking, Slow to Fast
		142-153	Gobo 5 Shaking, Slow to Fast
		154-165	Gobo 6 Shaking, Slow to Fast
		166-177	Gobo 7 Shaking, Slow to Fast
		178-189	Gobo 8 Shaking, Slow to Fast
		190-221	Counter-Clockwise Rotation, Fast to Slow
		222-223	Stop
		224-255	Clockwise Rotation, Slow to Fast
17	Pattern Effects	0-6	Effects Gobo Cut Out
		7-63	Index 0°- 360°
		64-126	Counter-Clockwise Rotation, Fast to Slow
		127-128	Stop
		129-191	Clockwise Rotation, Slow to Fast
		192-255	Effect pattern rotates back and forth, from slow to fast
18	Iris	000 - 225	Iris from large to small
		226 - 235	Iris slow open fast close from slow to fast
		236 - 245	Iris slow close fast open from slow to fast
		246 - 255	Iris slow close slow open from slow to fast
19	Iris Fine	0-255	0-100%
20	Prism 1	0-7	Prism 1 Out
		8-255	Prism 1 In
21	Prism 1 Rotate	0-127	Index 0°- 360°
		128-189	Counter-Clockwise Rotation, Fast to Slow
		190-193	Stop
		194-255	Clockwise Rotation, Slow to Fast
22	Prism 2	0-7	Prism 2 Out
		8-255	Prism 2 In

23	PRISM 2 Rotate	0-127	Index 0°- 360°
		128-189	Counter-Clockwise Rotation, Fast to Slow
		190-193	Stop
		194-255	Clockwise Rotation, Slow to Fast
24	Frost 1	0-127	Frost 1 Off
		128-255	Frost 1 On
25	Zoom	0-255	Wide to Narrow
26	Zoom Fine	0-255	0-100%
27	Focus	0-255	0-100%
28	Focus Fine	0-255	0-100%
29	Strobe	0-3	Close
		4-99	Synchronized Strobe
		100-149	Pulse Strobe
		150-199	Flash Strobe
		200-249	Random Strobe
		250-255	Open
30	Dimmer	0-255	0-100%
31	Dimmer Fine	0-255	0-100%
32	Blade Rotate	0-255	0°-180°
33	Blade Rotate fine	0-256	0-100%
34	BLADE UP 1	0-255	Blade Up A 0%-100%
35	BLADE UP 2	0-255	Blade Up B 0%-100%
36	BLADE LF 1	0-255	Blade Left A 0%-100%
37	BLADE LF 2	0-255	Blade Left B 0%-100%
38	BLADE DW 1	0-255	Blade Down A 0%-100%
39	BLADE DW 2	0-255	Blade Down B 0%-100%
40	BLADE RG 1	0-255	Blade Right A 0%-100%
41	BLADE RG 2	0-255	Blade Right B 0%-100%
42	Macro	000 - 005	No function
		006 - 020	Horizontal reverse open
		021 - 025	Horizontal reverse close
		026 - 030	Vertical reverse open
		031 - 035	Vertical reverse close
		036 - 040	Mobile light blocking ON
		041 - 045	Mobile light blocking OFF
		046 - 050	No function
		051 - 055	Fan set to auto mode
		056 - 060	Fan set to high speed mode
		061 - 065	Fan set to high Silent mode
		066 - 070	Fan set to ultra-quiet mode
		071 - 075	Curve Linear
		076 - 080	Curve Square
		081 - 085	Curve Inv Square
		086 - 090	Curve S

		091 - 095	400Hz
		096 - 100	1200Hz
		101 - 105	2000Hz
		106 - 110	4000Hz
		111 - 115	6000Hz
		116 - 120	8000Hz
		121 - 125	16KHz
		126 - 130	24KHz
		131 - 135	Display backlight on
		136 - 140	Display backlight for 15 s
		141 - 145	Display backlight for 30 s
		146 - 150	Display backlight for 60 s
		151 - 155	Dimmer Speed Smooth
		156 - 160	Dimmer Speed Fast
		161 - 165	Reset Pan/Tilt
		166 - 170	Reset Moving Head
		171 - 175	Reset All
		176 - 180	Signal Keep on
		181 - 185	Signal Keep off
		186 - 255	No function