

User's Manual

DECO series

DECO-5 / DECO-5-T
DECO-6 / DECO-6-T / DECO-6-TB
DECO-8 / DECO-8-T

CONTENTS

DECLARATION OF CONFORMITY 3

INTRODUCTION . . . . . 4 - 6

General

Features

Description

INSTALLATION . . . . . 6 - 8

Preliminary considerations

Types of installation

Installation

MAINTENANCE & USE 8

DECLARATION OF CONFORMITY

DAS Audio Group, S.L.
C/ Islas Baleares, 24 - 46988 - Pol. Fuente del Jarro - Valencia. España (Spain).

Declares that DECO-5 / DECO-5-T / DECO-6 / DECO-6-T / DECO-6-TB / DECO-8 / DECO-8-T:

Abide by essential objectives relating Directives:

- Low Voltage 2014/35/UE
- RoHS 2011/65/UE
- WEEE 2012/19/UE

In accordance with Harmonized European Norms:

- -EN 62368-1:2014/AC:2017-03. Audio/video, information and communication technology equipment - Part 1: Safety requirements (IEC 62368-1:2014, mofified)

- - EN IEC 63000:2018. Technical documentation for the assessment of electrical and electronic products with respect to the restriction of hazardous substances.

INTRODUCTION

General

Thank you for purchasing DAS products. This manual contains the required information to make the best use of the system you have purchased.
Please take the time to read it.

Features

• The materials and design uses for these units represent advanced sound reinforcement technology that delivers outstanding audio performance from compact and easy-to-use products. Sound field coverage is wide with efficient mid and high frequency reproduction for greater intelligibility.

• High induction magnetic circuits result in reduced distortion and listening fatigue for spoken voice and music reproduction.

• Polypropylene cones avoid age deterioration when exposed to heat and air humidity.

• Technical specifications are shown in Table 1 for all models:
Note: Position marked with an “X” should not be utilised.

• All models feature a removable protective grille with a DAS logo, which allows access to the front of the loudspeakers. For removal, a pointy object needs to be introduced on a grille hole. For further detail, consult section INSTALLATION of this manual.

WARNING: BE CAREFUL NOT TO DAMAGE THE CONE WITH THE POINTY OBJECT WHEN REMOVING THE GRILLE

• Connection terminals are spring-loaded and colour coded: red for positive, black for negative. Transformer models have 4 terminals, a common one plus three other ones that correspond to each of the three possible selected input power levels. Check the back label for the corresponding power for different line voltages. Do not use the 6W terminal for a 100V line.

• The label on the speaker’s back plate contains the main product specifications and standard compliances.

• All models comprise three main elements: the plastic support, the speaker and the grille. The back of the support houses four small turrets for the screws that fix the speaker chassis, plus other four larger turrets. The latter house the tabs that fix the speaker assembly to the ceiling tile assembly when rotating the turrets’ screws.

• Thus, all models have eight screws, 4 for fixing the speaker to its plastic support, and four that operate the mounting tabs that fix the assembly to the ceiling.

• All screws are accessed from the back, i.e. the front grille must be removed for screwing / unscrewing.

• All models are shipped with a tile cut out template. If painting of the plastic ring is needed, a round paper piece is also shipped to cover the rest of the speaker when painting.

MODEL	Nominal Impedance (W)	Averange [RMS] Power Handling (W)	Sensitivity [on axis 1W/1m] (dB SPL)	Frequency range (Hz)
DECO-5	8	20	89	70 - 15k
DECO-6	8	40	90	60 - 20k
DECO-8	8	60	90	50 - 20k
DECO-6-TB*	8	40	90	60 - 20k
MODEL	**Nominal Impedance (W)**	**Averange [RMS] Power Handling (W)**	**Sensitivity [on axis 1W/1m] (dB SPL)**	**Frequency range (Hz)**
DECO-5-T	100	3 - 6 - X	89	70 - 15k
	70	1.5 - 3 - 6		
DECO-6-T	100	5 - 10 - 15	90	60 - 20k
	70	2.5 - 5 - 7.5		
DECO-8-T	100	10 - 20 - 30	90	50 - 20k
	70	5 - 10 - 15		
DECO-6-TB*	100	5 - 10 - 15	90	60 - 20k
	70	2.5 - 5 - 7.5		

* Can be used at low impedance or distributed line.

Table 1: Specifications

Description

All ceiling series models (front and back) can be seen below.

The exploded view below identifies the different elements to ease handling and installation.

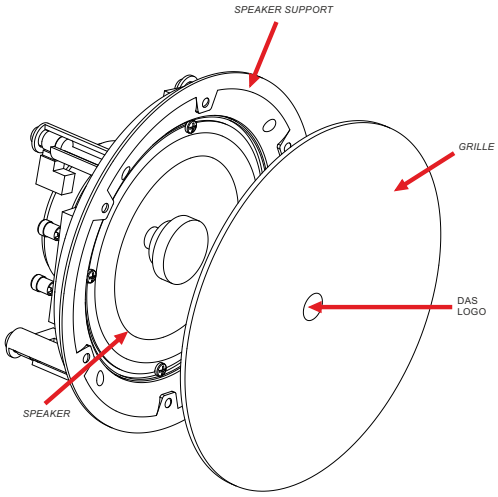

Fig. 1 – DECO front view

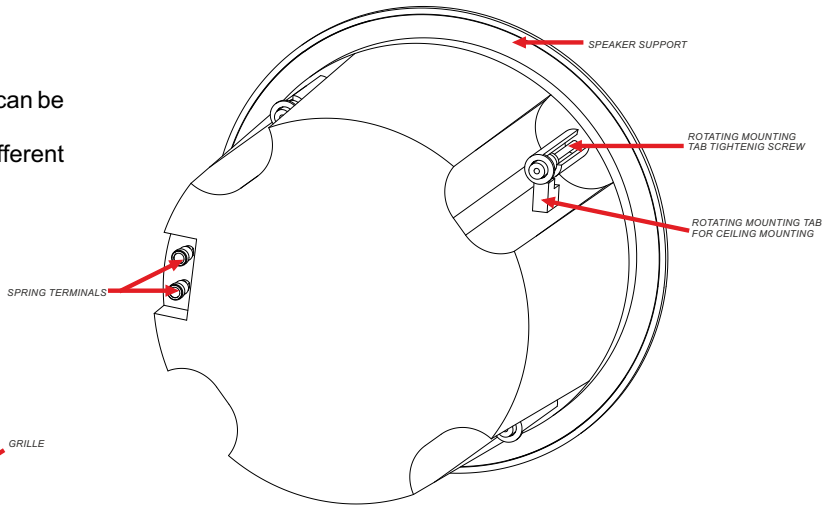

Fig. 3a – DECO-6-TB back view

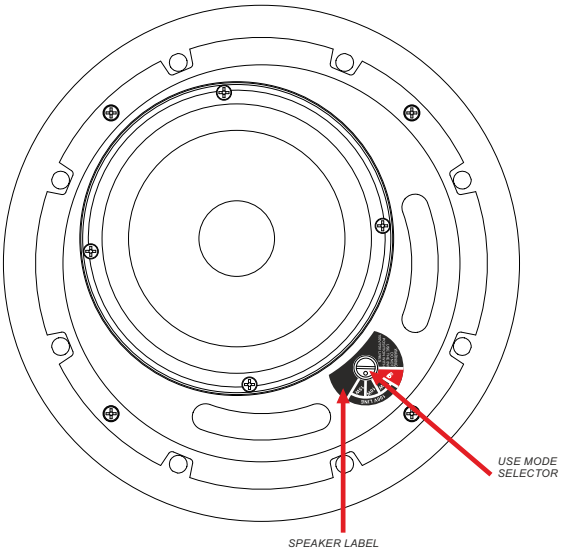

Fig. 3b – DECO-6-TB front view

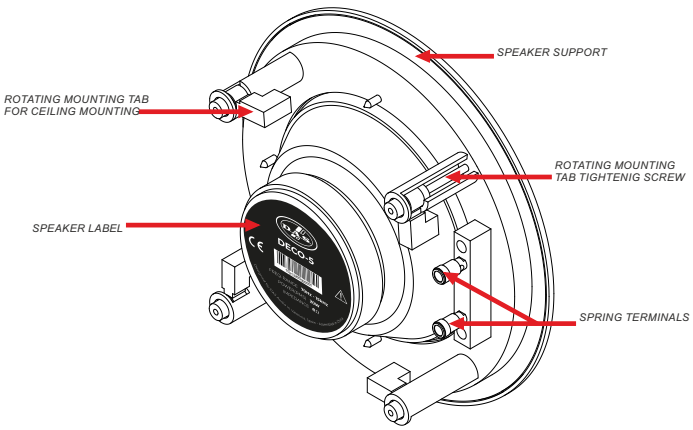

Fig. 2 – DECO-5, DECO-6 & DECO-8 back view

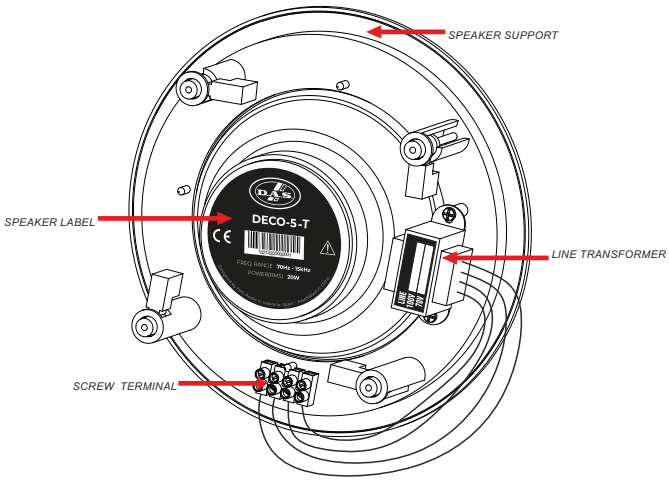

Fig. 4 – DECO-5-T, DECO-6-T & DECO-8-T back view

INSTALLATION

Preliminary considerations

For complete installation, we need to take the time to plan ahead the cutting out tile holes and the cabling of the units.

Conventional amplifiers can be used to power the DAS ceiling speakers. With them, two types of wiring configurations are possible.

Types of installation

A parallel configuration allows the use of two speakers per channel for a 4 ohm load:

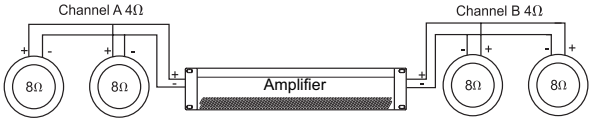

Fig. 5 – parallel connection

Series-parallel connection. Two loads are wired per channel, each load consisting of four units connected in series-parallel. A total of 8 speakers per channel can be installed this way:

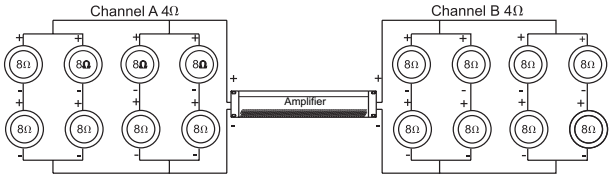

Fig. 6 - series-parallel connection

Similarly, if one does not wish to use a transformer model, the number of units in series-parallel can be increased, as long as 4 or more ohms impedance is achieved, as follows.

Each amplifier will drive two loads in parallel. Each will consist of the parallel connection of as many loads as we want to connect in series. Each of the latter loads consists of the units to be series connected (see Fig.7).

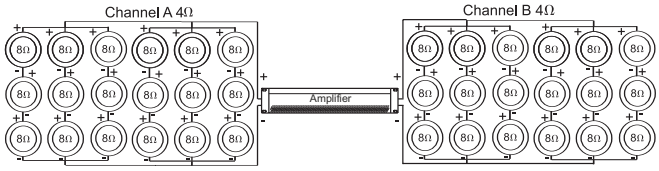

Fig. 7 – Series-parallel connection of a large number of speakers per channel

When working with a large number of units wired this way, one should ensure that all speakers get enough power.

Otherwise the user will tend to overload the amplifier, which in turn may result in speaker failure.

Example: for the system on the illustration, assuming DECO-6 (40W):

Each channel drives 18 units, for a total of 8x40=720W worth of speaker power handling. Since amplifier channel should be 100-150% of the speakers' power handling, 720 to 1000 W should be used for amplifier power (at 4 ohm).

For very large installations, the line transformer models should be used.

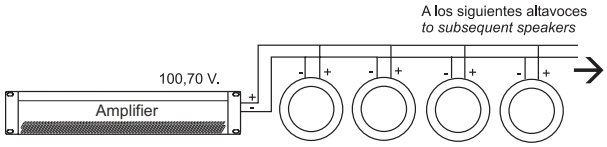

Fig. 8 – Parallel connection of transformer units

WARNING: BEFORE INSTALLING THE SPEAKERS, MAKE SURE THERE IS A MINIMUM CEILING VOID HEIGHT OF 100 mm (4").

Installation

The different installation steps are described. Before this can take place, the installation should be wired, leaving all of the ceiling wiring in place and ready for connection.

Step 1 – Remove the speaker grille: The grille must be removed for access to the mounting screws. Insert a pointy object and introduce it in a grille hole close to the edge. You'll remove the grille with ease if using two pointy objects on opposite ends.

WARNING: BE CAREFUL NOT TO DAMAGE THE CONE WITH THE POINTY OBJECT WHEN REMOVING THE GRILLE

Step 2 – Ceiling tile cut out: The following table lists the inner and recommended cut out diameters for the different models and the necessary depth in the ceiling structure to install the speakers:

MODEL	DEPTH REQUIRED		CUT OUT DIAMETER	
	mm	in	mm	in
DECO-5 DECO-5-T	75	3	181	7.2
DECO-6 DECO-6-T	80	3.2	210	8.3
DECO-8 DECO-8-T	115	4.6	250	9.85
DECO-6-TB	185	7.3	250	9.85

Table 2: inner and cut out diameters

Packaged with the speakers is a cardboard cut out template for scribing the cut out hole onto your ceiling surface. The inside circumference of the same template can be used to cover the rest of the speaker when painting.

Therefore the cut out may be scribed using the template provided or by drawing a circumference of the diameter in table 2. Once the hole is cut, you may need to pull down the cables so they are accessible for connection.

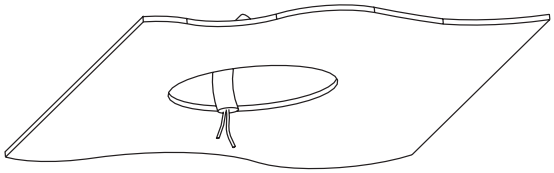

Fig. 9 – circular cut out, installation wiring

Step 3 – Terminal connection: the speakers terminals are spring loaded. Watch the colour coding for polarity. For connection to transformer models, you will need to select the required input power and connect to the appropriate terminals (see Fig. 10).

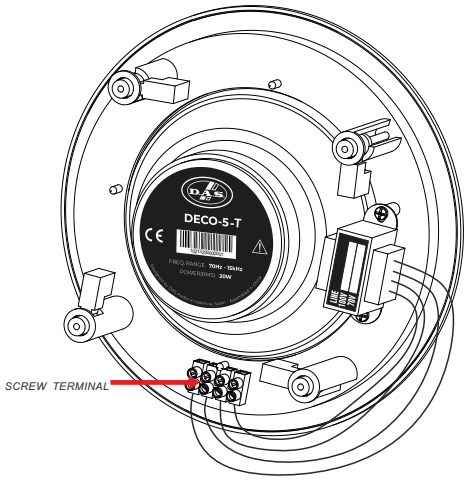

Fig. 10 – DECO-5-T; input power selection terminals

Step 4 – Inserting the speaker: follow these steps:

- Hold the speaker in one hand, while you use the other hand to connect the cable to the speaker.
- Push the assembly all the way into hole. The four mounting tabs must be tangential to the ring, otherwise they'll be in the way.

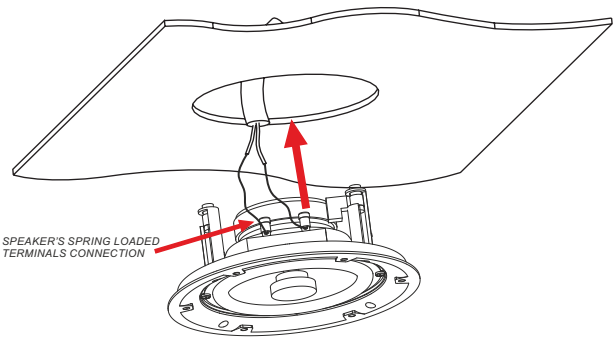

Fig. 11 – terminal connection; speaker positioning

WARNING: ALWAYS HOLD THE SPEAKER BY THE PLASTIC SUPPORT, AVOIDING DAMAGE TO THE TRANSDUCER DIAPHRAGMS

Step 5 – Screwing and fixing: to fix the assembly to the ceiling, the tabs have to be rotated and lowered. This is done by tightening the corresponding screws clockwise. The first quarter turn rotates the tab into position and out of the guide; the rest tightens the tab down onto the back of the ceiling surface. The process needs to be repeated for all four screws.

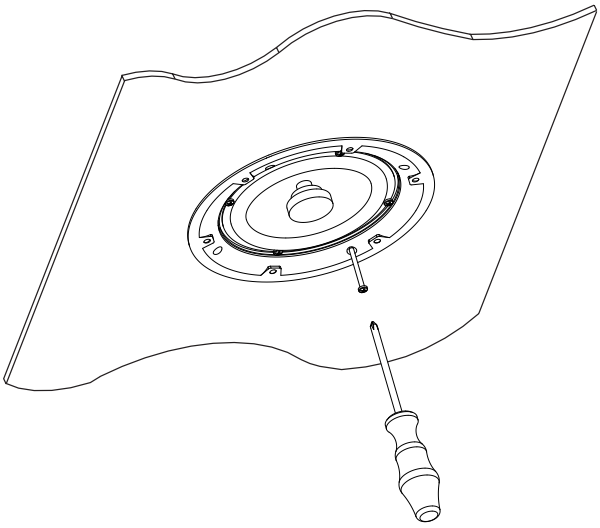

Fig. 12 – fixing the speaker to the ceiling

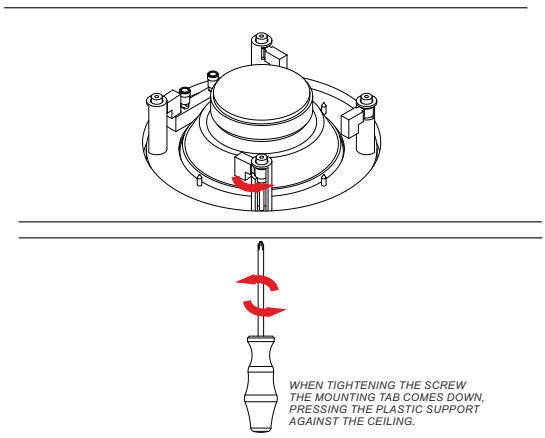

Fig. 13 – fixing system: when tightening the screw the mounting tab comes down, pressing the plastic support against the ceiling.

Step 6 – Replace the grille: once the speaker is fixed to the ceiling, this is the only operation left.

Push the grille into place until fixed. You will need to use the adhesives stripes provided.

Note: the grille shows some degree of resistance to be removed. Fixing is by contact, so there is little clearance between its inner diameter and the inner support, so that some force needs to be applied when removing it.

MAINTENANCE & USE

No maintenance is needed for the products in this manual if they have been installed correctly and following the instructions in this manual.

Some usage tips follow:

The best maintenance for a speaker is its correct use, i.e., within the design parameters. It is important not to utilise amplifiers that are too large when compared to the speaker power. In general, it is recommended that you use an amplifier with an output that is 100% to 150% of the speaker's average (RMS) power rating.

That way we have headroom for the dynamics of real music and vocal signals, and at the same time deliver a cleaner signal to the speakers that will result in a more reliable system. Avoid using too small an amplifier. The clip light of your amplifiers should never be on continuously. This will distort the signal and may damage the speakers. In fact, severe clipping is an easy way to burn a speaker's voice coil. At most, the clip light could blink occasionally. When clipped, signals sound distorted and produce listening fatigue quickly. Never use a total impedance load that is lower than the lowest impedance that an amplifier will take.

Virtually all professional amplifiers will accept loads down to four ohms safely in stereo mode. Many are rated for two ohm loads but often will run into overheating protection when used this way, particularly in high ambient temperature and high output power applications.

Never connect more speakers to an amplifier's channel than it will take, i.e. do not load a channel with total impedance that is lower than the minimum load specified by the manufacturer.



www.dasaudio.com

UM_DECO_01_EN

DAS Audio Group, S.L. C/. Islas Baleares, 24. 46988 Fuente del Jarro. Paterna. Valencia. España. Tel.: +34 96 134 0860