Accsoon CoMo II

User Manual v2.0



Content

01 Packing List [01]

02 Product Description [06]

03 Product Features [06]

04 Instruction [07]

05 Pairing & Pairing Memory Erasing [13]

06 Using External Headset [15]

07 Specification [16]

08 FAQ [17]

09 Warranty [17]

10 After sales [17]

11 Safety information [18]

12 Contact Us [18]

13 Statement [19]

01 Packing List

1.1 1 host headset, 8 remote headsets package includes

Host Headset × 1



Remote headset × 8



User manual × 1



Battery × 18



Battery charger × 2



Headset ear cushion × 9

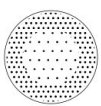

Microphone windscreen × 9



Headset storage bag × 9



Storage container × 1



1.2 1 host headset, 6 remote headsets package includes

Host Headset × 1



Remote headset × 6



User manual × 1



Battery × 14



Battery charger × 2



Headset ear cushion × 7

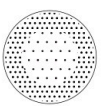

Microphone windscreen × 7



Headset storage bag × 7



Storage container × 1

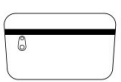

1.3 1 host headset, 4 remote headsets package includes

Host Headset × 1



Remote headset × 4



User manual × 1



Battery × 10



Battery charger × 1



Headset ear cushion × 5

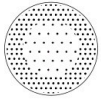

Microphone windscreen × 5



Headset storage bag × 5



Storage container × 1



1.4 1 host headset, 2 remote headsets package includes

Host Headset × 1



Remote headset × 2



User manual × 1



Battery × 6



Battery charger × 1



Headset ear cushion × 3

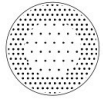

Microphone windscreen × 3



Headset storage bag × 3



Storage container × 1



1.5 Single headset package includes

Headset × 1



Battery × 1



Headset ear cushion × 1

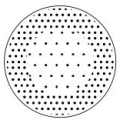

Microphone windscreen × 1



User manual × 1



02 Product Description

Thank you for choosing Accsoon CoMo II, a full-duplex wireless intercom system with AI noise cancellation. Powered by dual-microphone ENC and AI ENC, CoMo II reduces environmental noise for clear, real-time communication. One host headset supports up to eight remote headsets, enabling communication for teams of up to 9 people. With a line-of-sight range of up to 1312 ft (400 m), automatic reconnection, and over 10 hours of battery life, Accsoon CoMo II delivers stable, hands-free communication without the need for a base station.

03 Product Features

- Dual-microphone ENC and AI ENC
- 1 host headset can support up to 8 remote headsets
- Full duplex real-time audio communication
- 1312ft line of sight transmission range
- Support audio output and external audio input
- Simply power on for immediate use, reconnects automatically when the signal is restored.
- Industry-leading wireless stability for easier real-time communication
- Ergonomic headset design, compatible for both left ear and right ear wearing
- Flip-to-mute microphone
- 10+ hours of extended battery life

04 Instruction

4.1 Product Overview

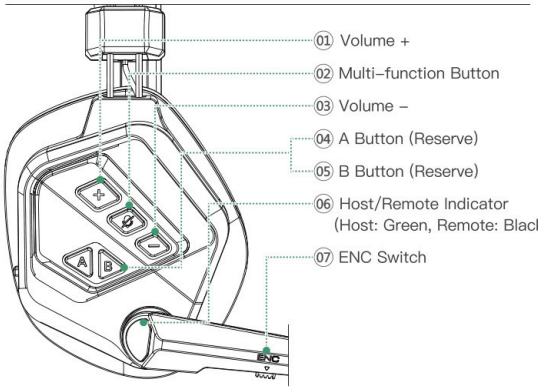

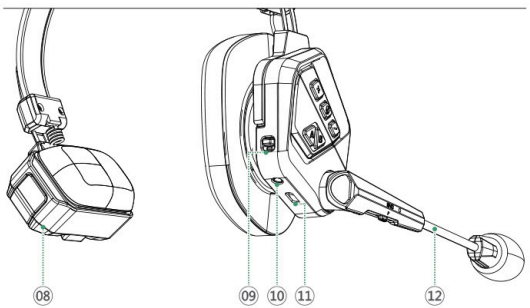

08 Battery Compartment
09 Power Switch
10 3.5mm External Headphone or Microphone Jack
11 Firmware Update Port
12 Microphone Boom

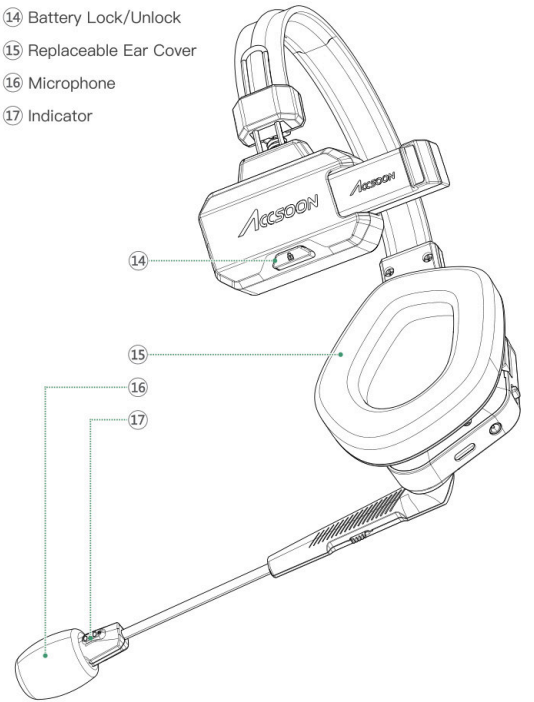

4.2 Charger

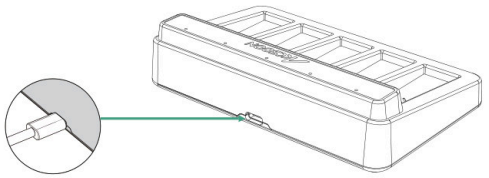

4.3 Button and Switch Operation

Button and Control	Operating Instruction	Function
Multi-function Button	Press	Mute/Unmute the microphone
	Press and hold 3 seconds	Enter/Exit pairing mode
Volume+	Press	Volume up (Volume level: 1–7, Default: 4)
Volume–	Press	Volume down (Volume level: 1–7, Default: 4)
Volume+ and Volume–	Press both buttons and hold 3 seconds	Pairing memory erasing
ENC Switch	Slide to ON	Enable ENC
	Slide to OFF	Disable ENC
Mic Boom	Lift up	Turn on the Microphone
	Put down	Turn off the Microphone

4.4 Indicator Status

LED A (Red Light)	LED B (Green Light)	Status
On	On	Connected (default state)
Both flash rapidly		Ready to pair
Flashes slowly in alternation		Pairing
Flashes rapidly in alternation		Low battery warning
Flash rapidly	Flash slowly	Pairing reset takes approximately 10 seconds on the host headset.

4.5 Voice Prompt

Status	English Voice Prompt
Headset powered on	Power on
Host headset and remote headsets connected	Connected
Host headset and remote headsets disconnected	Disconnected
Low battery	Battery level low
Auto power off due to low battery	Power off
ENC noise cancellation on	Noise cancelling on
ENC noise cancellation off	Noise cancelling off
Pairing mode on	Pairing
Pairing mode off	Exit
Start reset pairing	Erase pairing
Pairing reset Completed	Erasing completed

Volume adjusted	“Beep”
Volume minimum or Volume maximum	“Beep”
Mic boom raised/lowered	“Toot”

4.6 Quick Use

How to install/remove the battery

01 Insert the battery into the compartment in the correct orientation as indicated. A firm “click” indicates that the battery is securely locked in place.

02 To remove the battery, press and hold the battery lock, then pull the battery out.

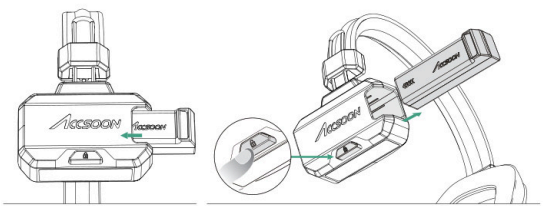

Power On/Off

Power On: Slide the Power Switch to “ON”. The headset will power on and a “power on” voice prompt will be heard. After startup, refer to Indicator Status to confirm the current operating state. Once the host and remote headsets are successfully paired and connected, lower the microphone boom to start communication.

Power Off: To power off, slide the Power Switch to “OFF”.

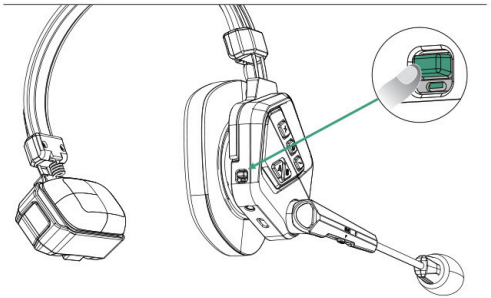

Microphone On/Off

As shown in the picture, when the microphone boom is placed at [±45°], the microphone is muted.
To turn on the microphone, push the microphone boom forward to 45°. You will hear a “Toot” voice prompt, when the microphone is turned on/off.

Note:
Maximum rotation angle of the boom shaft is [±118°]

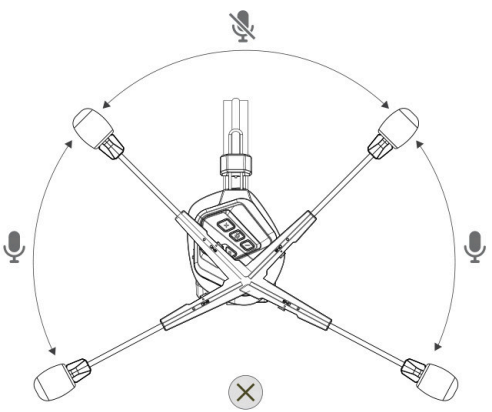

Battery Charging

The charger supports power input from USB PD Chargers. Please use a standard USB-C adapter to power the charger.

Charging Status LED:

- Charging: White LED flashes.
- Fully Charged: White LED stays on steadily.

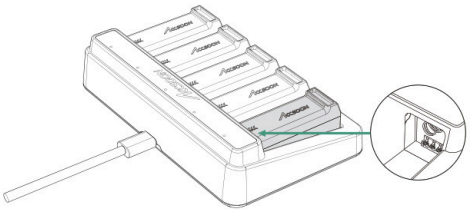

05 Pairing & Pairing Memory Erasing

Pairing and resetting pairing must be performed while the headsets are powered on. The host and remote headsets are pre-paired at the factory and require no additional pairing, they are ready to use immediately after power-on. Pairing is only necessary when adding a new headset to an existing set.

5.1 Pairing

- **Pairing mode on**

  Press and hold the multi-function button on both the host and remote headsets for 3 seconds to enter pairing mode. A voice prompt "Pairing" will sound, and the indicator will switch to pairing status.

- **Paired**

  Host headset: One host can pair with multiple remote headsets. After successfully pairing with one remote headset, the host will not play any voice prompt. The indicator will remain in pairing mode while waiting for additional headsets to pair.
  The host pairing duration is set to 120 seconds.

  Remote headset: A "connected" voice prompt is played and the indicator enters connected status.

- **Pairing mode off**

  Manual exit: Press and hold the multi-function button for 3 seconds to exit pairing mode and a voice prompt will be played.

Timeout exit: The host automatically exits pairing mode after 120 seconds. If the pairing has not completed within 30 seconds, the remote headset automatically exits pairing mode and enters unconnected status.

Note:
Please ensure you exit pairing mode before using Accsoon CoMo II for communication.

5.2 Pairing Memory

A single host headset can store pairing information for up to 8 remote headsets. If the host headset's pairing memory is not full, additional remote headsets can be paired by following the pairing procedure. Pairing a new remote headset does not affect the connection status of previously paired remote headsets.
A remote headset can store pairing information for only one host headset. To pair with a different host headset, the remote headset must repeat the pairing procedure as described above.

Note:
If you purchase a new host headset, you can reassign the Accsoon CoMo II set. Remote headsets can be paired with the new host by following the instructions in Pairing. Multiple host-remote headset systems can be used simultaneously in the same environment.

5.3 Pairing Memory Erasing

If your host headset has already memorized 8 remote headsets, the existing pairing memory must be cleared before pairing new remote units.
How to:
Step 1: Switch your host headset "ON".
Step 2: Press and hold both the volume up "+" and down "-" button for 3 seconds. The host headset indicator will alternately flash red and green, and a "erasing pairing" voice prompt will sound, indicating that the host headset has entered the memory erasing process.
Step 3: Once the pairing reset is complete, an "erasing completed" voice prompt will sound. The two LED indicators will then flash rapidly at the same time, indicating that the headset is ready for pairing and connection.

Note:
The pairing memory erasing process takes approximately 10 seconds.

06 Using External Headset

Accsoon CoMo II features a standard 3.5mm CTIA headset jack, compatible with third-party headsets. Once connected, the built-in microphone and speaker are automatically disabled. This function is particularly suitable for noisy environments or work scenarios that require binaural monitoring, helping users stay focused on communication and enhancing operational efficiency.

Note:
Dual-microphone ENC is disabled when an external headset is connected.

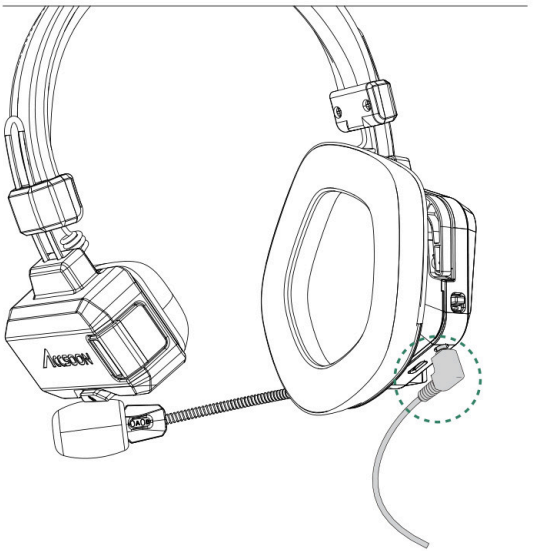

07 Specification

Range	⩾1312ft / 400m (line of sight without interference)
Modulation	GFSK
Receiving Sensitivity	<-93dBm
Battery Capacity	1500mAh
Operating Time	Remote headset: 17 hours Host headset: 11 hours (7 remotes in connection) Host headset: 17 hours (1 remote in connection)
Sampling Rate	16KHz/16-bit
Frequency Response	150Hz~7KHz
Signal-to-noise Ratio	>65dB
Input SPL	>128 dB SPL
Output SPL	Typical Value 96±3dB SPL
ENC	Dual Mic ENC and AI ENC
Weight	<170g (including ear cushions and battery)
Dimensions	182 x 170 x 78 mm
Operating Temperature	-10°C~45°C
Storage Temperature	-20°C~55°C

08 FAQ

Connection drop

1. If the host headset is powered off, or the distance between the host and remote headsets is too far, the remote headsets will be disconnected from the host.
2. When disconnection occurs, power on the host headset or bring the host and remote headsets back within communication range. The remote headsets will automatically reconnect to the host.

09 Warranty

Warranty period

1. If product quality related issues occur within 15 days of receiving the product, Accsoon provides complimentary maintenance or replacement.
2. Under proper use and maintenance, from the date of receipt, Accsoon provides a one-year warranty on the main product (headset, battery charger) and a three-month warranty on the battery. Free maintenance service is available during the warranty period.
3. Please keep the proof of purchase and the user manual.

Warranty exclusion

1. Out of warranty period (If the proof of purchase is unavailable, the warranty will be calculated from the date the product is delivered from the manufacturer).
2. Damage caused by use or maintenance of not following the requirements of the user manual.
3. Accessories not covered by warranty (ear cushions, windscreens, headset sleeves, storage bags and containers).
4. Unauthorized repair, modification or disassembly.
5. Damage caused by force majeure such as fire, flood, lightning strike, etc.

10 After sales

1. Please contact your local Accsoon authorized dealers for after-sales service. When there is no authorized dealer available in your region, you can contact Accsoon through email at support@accsoon.com or contact our customer service through our website (www.accsoon.com).

2. You can get detailed solutions from authorized dealers or Accsoon. Accsoon reserves the right to review the damaged product.

11 Safety information

1. When operating this equipment, read and follow all the instructions in this manual.
2. Use only accessories/batteries/chargers specified or recommended by Accsoon.
3. Do not expose to moisture, excessive heat or fire.
4. Keep away from water and other liquids.
5. Store the equipment properly during lightning storms or when unused for long periods of time.
6. Please do not use the product in a place overheating, undercooling or with lots of moisture, or nearby strong magnetic devices.
7. To reduce the risk of fire or electric shock, refer servicing to qualified service personnel.

12 Contact Us

Website: accsoon.com

Facebook: Accsoon

Facebook Group: Accsoon Official User Group

Instagram: accsoontech

YouTube: ACCSOON

Email: support@accsoon.com

Federal Communications Commission Interference Statement

This device complies with part 15 of the FCC Rules. Operation is subject to the following two conditions:

(1) This device may not cause harmful interference, and

(2) this device must accept any interference received, including interference that may cause undesired operation.

Any Changes or modifications not expressly approved by the party responsible for compliance could void the user's authority to operate the equipment.

This equipment has been tested and found to comply with the limits for a Class B digital device, pursuant to Part 15 of the FCC Rules. These limits are designed to provide reasonable protection against harmful interference in a residential installation. This equipment generates, uses and can radiate radio frequency energy and, if not installed and used in accordance with the instructions, may cause harmful interference to radio communications. However, there is no guarantee that interference will not occur in a particular installation. If this equipment does cause harmful interference to radio or television reception, which can be determined by turning the equipment off and on, the user is encouraged to try to correct the interference by one or more of the following measures:

--Reorient or relocate the receiving antenna

--Increase the separation between the equipment and receiver.

--Connect the equipment into an outlet on a circuit different from that to which the receiver is connected.

--Consult the dealer or an experienced radio/TV technician for help.

This equipment complies with FCC radiation exposure limits set forth for an uncontrolled environment. This equipment should be installed and operated with minimum distance 20cm between the radiator & your body.

Operations in the 5.15–5.25GHz and 5.25–5.35GHz band are restricted to indoor usage only.

13 Statement

Note:

This manual may be updated from time to time due to product upgrades or other reasons.

Unless otherwise specified, it is provided for reference only.

All information in this document does not constitute any express or implied warranty.

CoMo II

Check the latest version on the official Accsoon website.
https://accsoon.com/download-center/

Accsoon® is a trademark of Accsoon Technology Co., Ltd.
Copyright© 2026 Accsoon All rights reserved