

SRX900

USER MANUAL

PS LA SUB

JBL PROFESSIONAL

GENERAL INFORMATION

SRX900 Series - User Manual

Part Number: 5152170-00

Version: D EN

Distribution Date: January 12, 2026

Copyright © 2026 HARMAN Professional, Inc. All rights reserved.

JBL PROFESSIONAL

8500 Balboa Boulevard

Northridge, CA 91325, USA

www.jblpro.com

TABLE OF CONTENTS

1 - DOCUMENT REVISION HISTORY 5

2 - SAFETY 6

3 - SYSTEM COMPONENTS 10

4 - COMPATIBLE ACCESSORIES 11

5 - SOFTWARE OVERVIEW 15

5.1 Venue Synthesis™ 15

5.2 Array Link™ 15

5.3 Performance™ 15

6 - SRX900 SERIES INTRODUCTION 16

7 - AMPLIFIER MODULES 17

7.1 Line-source Amplifier Panel 17

7.2 Point-source Amplifier Panel 18

7.3 Subwoofer Amplifier Panel 20

8 - DSP OVERVIEW 21

9 - AC POWER 22

9.1 AC Voltage Requirements 22

9.2 Power Connectors 22

9.3 Current Draw 23

9.4 Power States 24

9.5 Power LED 24

10 - AUDIO CONNECTIVITY 25

10.1 Rear Panel Audio LEDs 25

10.2 Example: Small System Audio Wiring 26

10.3 Example: Large System Audio Wiring 26

11 - NETWORKING 27

11.1 IP Addresses 27

11.2 Subnet Mask 27

11.3 Network Configuration for SRX900 Devices 27

11.4 Ethernet Ports 28

11.5 Network Topologies 28

12 - HCONTROL 30

12.1 HControl ID 30

12.2 HCID Use Cases 30

12.3 Example System HCID Addressing 30

13 - SPEAKER PRESETS 31
13.1 Line-source Modes 31
13.2 Point-source Modes 31
13.3 Subwoofer Presets 32
13.4 SRX906LA Preset Examples 33
13.5 SRX910LA Preset Examples 33
13.6 SRX900M Preset Examples 33
14 - ARRAY CALIBRATION 34
14.1 Filter 1- Array Size Compensation (ASC) 34
14.2 Filter 2 - Throw Distance Compensation (TDC) 34
14.3 Array Calibration Filter Example 35
15 - SUBWOOFERS 36
15.1 Cardioid Subwoofers 36
15.2 Recommended Cardioid Setups 36
15.3 Minimum Space Between Cardioid Stacks 37
15.4 Subwoofer Ratios for Line-Source Models 37
15.5 Subwoofer Ratios for Point-Source Models 38
16 - LCD 39
16.1 Overview Screens 39
16.2 DSP 39
16.3 Network 41
16.4 HControl 42
16.5 Settings 42
16.6 Info 43
16.7 System Reset 44
16.8 Menu Overview 45
16.9 Revert Firmware 46
17 - RAIN COVER 47
17.1 Installing the SRX900 RC Rain Cover 48
18 - CONTACT INFORMATION 49

1 - DOCUMENT REVISION HISTORY

VERSION	RELEASE DATE	CHANGES
Version A	May 10, 2022	• Initial SRX900 User Manual
Version B	August 3, 2022	• Minor formating improvements • Updated contact information • Updated regulatory specifications
Version C	January 30, 2025	• Removed LAC3 and added Venue Synthesis to the software section • Added SRX915SF, SRX918SF and additional accessories • Added 100V current draw specifications • Removed product specifications and drawings from the document. Refer to the product specification sheets for detailed specifications and dimensions
Version D	January 12, 2026	• Added the SRX912M, SRX915M, SRX922 and supporting accessories • Updated safety information • Added PPE section

2 - SAFETY

2.1 SAFETY INSTRUCTIONS

1. Read these instructions.
2. Keep these instructions.
3. Heed all warnings.
4. Follow all instructions.
5. Do not expose the product to direct rain or sea spray.
6. Do not install near any heat sources such as radiators, heat registers, stoves, or other apparatus that produce heat.
7. Only use attachments/accessories specified by the manufacturer.
8. Use only with a cart, stand, tripod, bracket, or table specified by the manufacturer or sold with the apparatus. When a cart is used, use caution when moving the cart/apparatus combination to avoid injury from tip-over.
9. Refer all servicing to qualified service personnel. Servicing is required when the apparatus has been damaged in any way, such as if liquid has been spilled or objects have fallen into the apparatus, or if the apparatus has been exposed to rain or moisture, does not operate normally, or has been dropped.
10. Contact JBL Professional for advanced servicing issues.
11. **CAUTION - Do not perform any servicing unless you are qualified to do so.**
12. Prolonged exposure to excessive SPL can cause hearing damage. The loudspeaker is easily capable of generating sound pressure levels (SPL) sufficient to cause permanent hearing damage to performers, production crew, and audience members. Caution should be taken to avoid prolonged exposure to SPL in excess of 90 dB.
13. Read the **SRX900LA Rigging Manual** and **SRX900PS Rigging Manual** before installation and use of the products.

2.2 GENERAL HARDWARE INFORMATION

Any hardware used in an overhead suspension application must be load rated for the intended use. Generally, this type of hardware is available from rigging supply houses, industrial supply catalogs, and specialized rigging distributors. Local hardware stores do not usually stock these products. Compliant hardware will be referenced with a working load limit (WLL) and a traceability code.

2.3 ATTACHMENT TO STRUCTURES

A licensed Professional Engineer must approve the placement and method of attachment to the structure prior to the installation of any overhead object. The following performance standards should be provided to the Professional Engineer for design purposes: Uniform Building Code as applicable, Municipal Building Code as applicable, and Seismic Code as applicable. The installation of the hardware and method of attachment must be carried out in the manner specified by the Professional Engineer. Improper installation may result in damage, injury, or death.

2.4 IMPORTANT SAFETY WARNING

The information in this section has been assembled from recognized engineering data and is intended for informational purposes only. None of the information in this section should be used without first obtaining competent advice with respect to applicability to a given circumstance. None of the information presented herein is intended as a representation or warranty on the part of JBL. Anyone making

use of this information assumes all liability arising from such use.

All information presented herein is based upon materials and practices common to North America and may not directly apply to other countries because of differing material dimensions, specifications, and/or local regulations. Users in other countries should consult with appropriate engineering and regulatory authorities for specific guidelines.

Correct use of all included hardware is required for secure system suspension. Careful calculations should always be performed to ensure that all components are used within their working load limits before the array is suspended. Never exceed the maximum recommended load ratings.

Before suspending any speaker system, always inspect all components (enclosure, rigging frames, pins, eye bolts, track fittings, etc.) for cracks, deformations, corrosion, or missing/loose/damaged parts that could reduce strength and safety of the array. Do not suspend the speaker until the proper corrective action has been taken. Use only load-rated hardware when suspending JBL suspendable loudspeaker models.

2.5 ARE YOU NEW TO RIGGING?

If you are new to rigging, you should:

- Know the rules for safe rigging.
- Attend a safe rigging seminar.
- Meet and establish a relationship with a licensed mechanical or structural engineer. Get in the habit of asking them questions instead of assuming their answers. Learn from what they tell you.
- Research and understand the codes, practices, and requirements of the venues where you intend to operate your sound system.

2.6 INSPECTION AND MAINTENANCE

Suspension systems are comprised of mechanical devices and, as such, require regular inspection and routine maintenance to ensure proper functionality. Before suspending or pole mounting any speaker system, always inspect all components (enclosure, suspension frames or brackets, pins, eyebolts, etc.) for cracks, deformations, corrosion, or missing/loose/damaged parts that could reduce strength and safety of the array. Do not suspend or pole mount a speaker until the proper corrective action has been taken.

Installed systems should be inspected at least once a year. The inspection must include a visual survey of all corners and load-bearing surfaces for signs of cracking, water damage, delamination, or any other condition that may decrease the strength of the loudspeaker enclosure.

Accessory suspension hardware provided with or for SRX900 systems must be inspected for fatigue at least once a year or as required by local ordinance. The inspection must include a visual survey of the material for signs of corrosion, bending, or any other condition that may decrease the strength of the fastener. Additionally, any eyebolts must be checked for possible spin-out of the enclosure.

For all other hardware and fittings, refer to the hardware manufacturer's inspection and maintenance guidelines for process.

JBL is not responsible for the application of its products for any purpose or the misuse of this information for any purpose. Furthermore, JBL is not responsible for the abuse of its products caused by avoiding compliance with inspection and maintenance procedures or any other abuse.

Prior to suspending the system, an expert, trained and experienced in suspending speaker systems, should inspect all parts and components.

2.7 SYMBOLS

The following symbols are used in this document:



CAUTION: This symbol gives notice of a potential risk of harm to the individual or the equipment. Instructions marked with this symbol must be strictly followed.



TIP: This symbol gives notice of helpful, relevant information about the topic.



INSTRUCTIONS: This symbol gives notice of instructions that must be followed for proper installation and use of the product.



TOOLS REQUIRED: This symbol gives notice of tools that must be used for proper installation and use of the product.



TIPPING HAZARD: This symbol gives notice of potential tip hazard. Use caution when moving the cart/apparatus combination to avoid injury from tip-over.

2.8 PERSONAL PROTECTIVE EQUIPMENT (PPE)

Appropriate personal protective equipment (PPE) must be worn whenever installing, adjusting, or removing rigging hardware or loudspeakers. This includes, but is not limited to, safety helmets, protective footwear, gloves, and eye protection. PPE helps reduce the risk of injury from falling objects, sharp edges, pinch points, and other hazards commonly present during rigging operations. Always follow applicable local regulations, workplace safety requirements, and site-specific safety procedures when performing rigging tasks.



HEADWEAR: Protective headwear shall be worn.



FOOTWEAR: Protective footwear shall be worn.



GLOVES: Protective gloves shall be worn.



EYEWEAR: Protective eyewear shall be worn.



LIFTING: Practice safe lifting.

2.9 RESOURCES AND DOCUMENTATION

Several resources are available to SRX900 Series owners to illustrate proper and safe use of the equipment. Below is an overview of what is available and a brief description of each resource:

USER MANUAL: This document focuses on the electromechanical aspects of the system, including amplification, wiring, speaker presets, tuning, and optimization. User manuals do not include information regarding rigging and suspension hardware.

RIGGING MANUAL: This document focuses on the mechanical aspects of the system, including step-by-step rigging instructions, accessory usage, mechanical limits, and safety instructions. All users must read this document.

SPECIFICATION SHEETS: These documents include detailed specifications for loudspeakers and accessories. Specifications include acoustical performance, material types, weight, and general mechanical information. Specification sheets are available for each SKU.

CUSTOMER DRAWINGS: This is a collection of files that include detailed drawings for each SKU. The collection consists of detailed dimensional 2D PDF/DXF documents and simplified 3D DXF models. Depending on the product, additional types of 3D files might be available for download at www.jblpro.com.

VIDEO TUTORIALS: Software and hardware video tutorials are available for watching on the JBL Professional YouTube channel.

3 - SYSTEM COMPONENTS

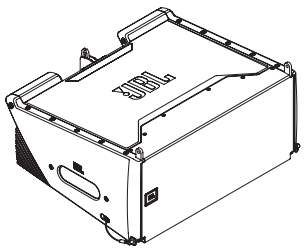

SRX906LA | Line-source Speaker

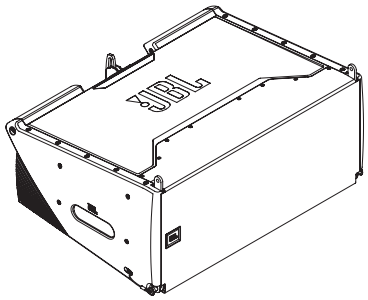

SRX910LA | Line-source Speaker

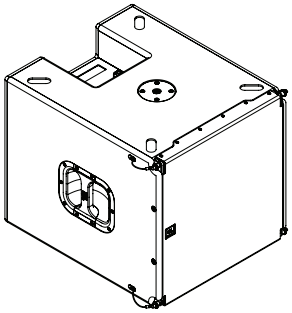

SRX915SF | Subwoofer

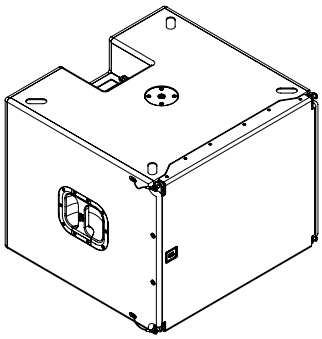

SRX918SF | Subwoofer

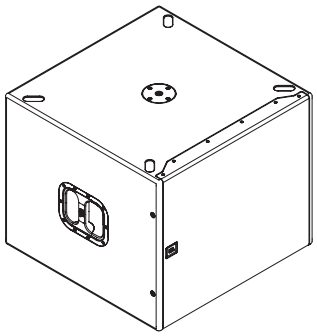

SRX918S | Subwoofer

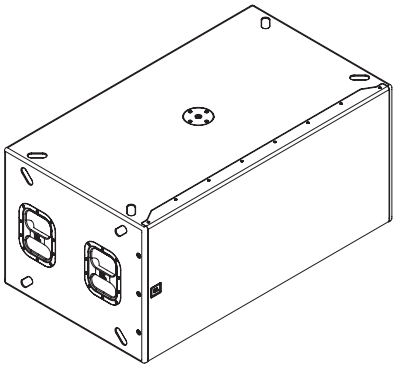

SRX928S | Subwoofer

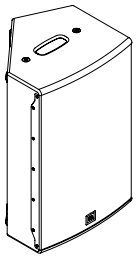

SRX912M | Multi-purpose Speaker

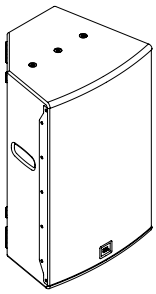

SRX915M | Multi-purpose Speaker

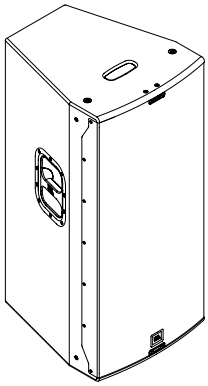

SRX922 | Point-source Speaker

4 - COMPATIBLE ACCESSORIES

All listed accessories are compatible with SRX900 Series products. For more information on the accessories and use cases refer to the **SRX900 Series Rigging Manual** and the **SRX900 Point Source Rigging Manual** found at www.jblpro.com.

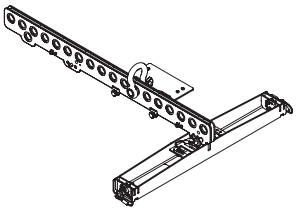

SRX906LA AF | Array Frame

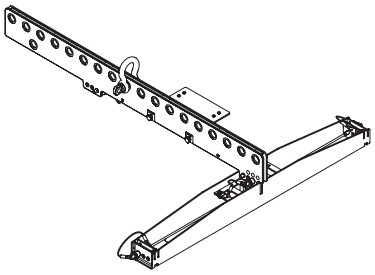

SRX910LA AF | Array Frame

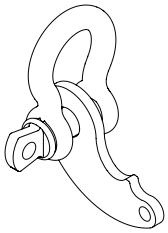

SRX900LA PB | Pull Back

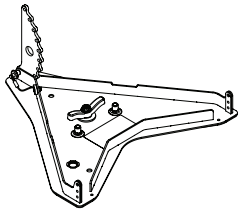

SRX906LA BP | Base Plate

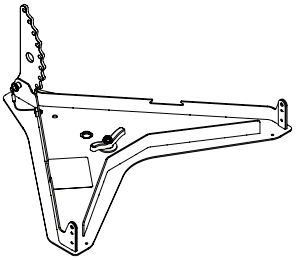

SRX910LA BP | Base Plate

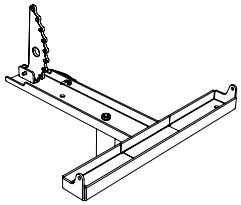

SRX906LA PM | Pole Mount

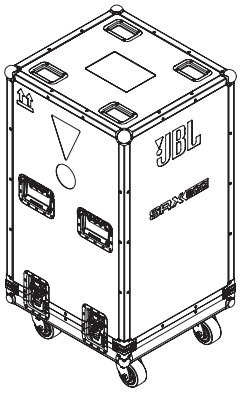

SRX906LA CASE

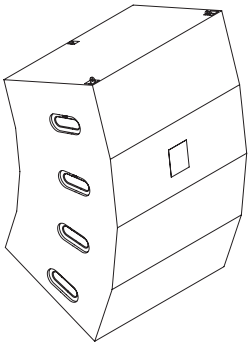

SRX910LA VT CVR

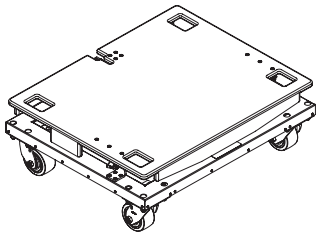

SRX910LA VT | Vertical Transport

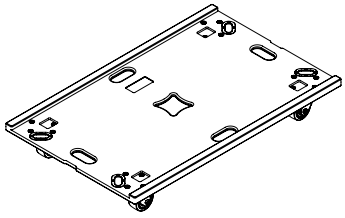

SRX928S VT | Vertical Transport

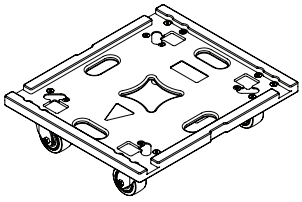

SRX915S VT | Vertical Transport

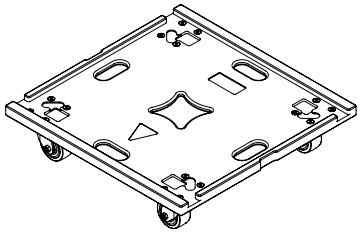

SRX918S VT | Vertical Transport

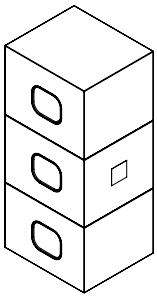

SRX915S VT CVR

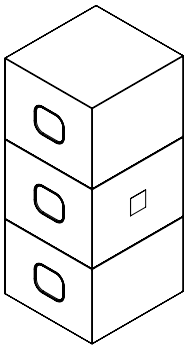

SRX918S VT CVR

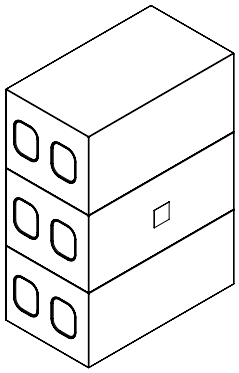

SRX928S VT CVR

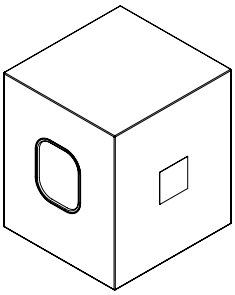

SRX915S CVR

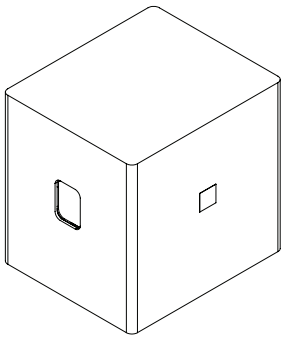

SRX918S CVR
SRX918SF CVR

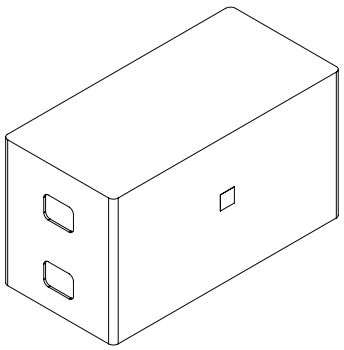

SRX928S CVR

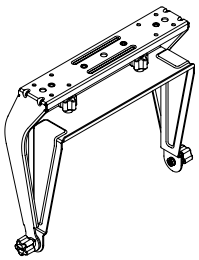

SRX912M UBV | Vertical U-Bracket

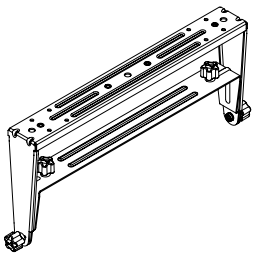

SRX912M UBH | Horizontal U-Bracket

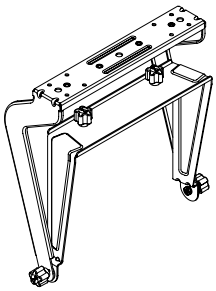

SRX915M UBV | Vertical U-Bracket

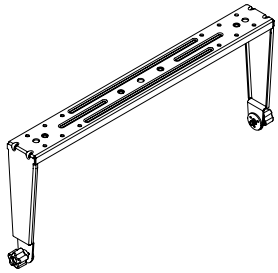

SRX915M UBH | Horizontal U-Bracket

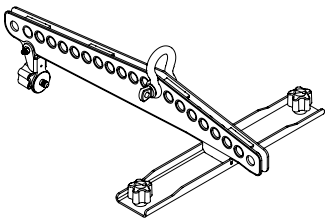

SRX922 AF | Array Frame

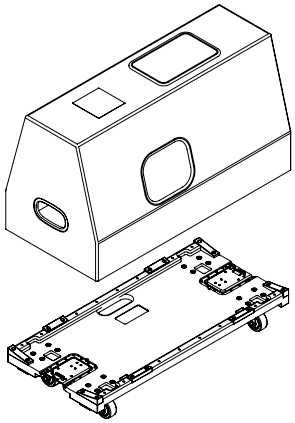

SRX922 ACC | Caster Board and Cover

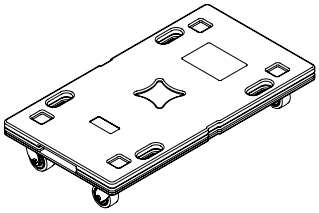

SRX922 VT | Vertical Transporter

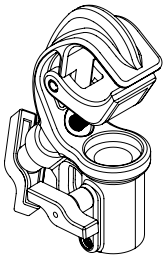

RC100 | Rotating Clamp

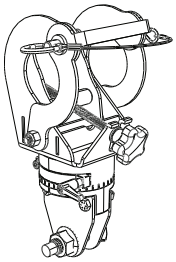

RC500 | Rotating Clamp

TIP: For rigging-specific instructions, refer to the **SRX900 Series Rigging Manual** found at www.JBLpro.com.

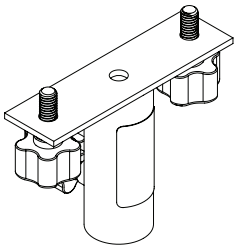

VTX PM | Pole Mount Adapter T-Style

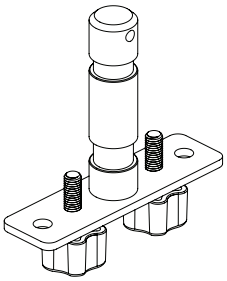

SPIGOT-T | Spigot Adapter T-Style

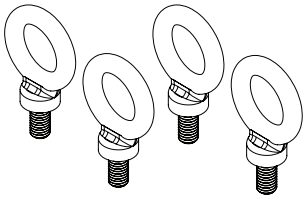

EBK4 M10-20 | Eyebolt Kit

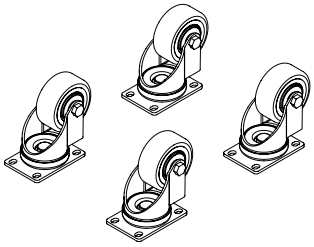

ACK1 | Accessory Caster Kit

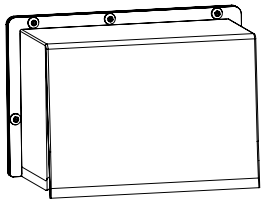

SRX900 RC1 | Rain Cover

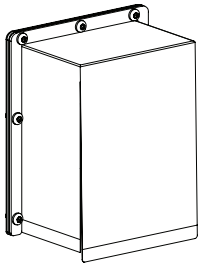

SRX900 RC2 | Rain Cover

CAUTION: Always use components and accessories specified and approved by JBL Professional. When a cart is used, use caution when moving the cart to avoid injury from tip-over.

5 - SOFTWARE OVERVIEW

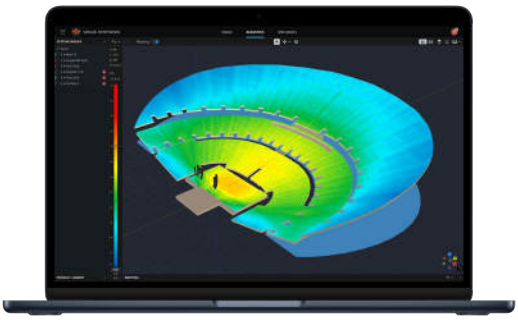

5.1 VENUE SYNTHESIS™

Venue Synthesis is a 3D acoustic simulation software, designed from the ground up to allow system designers and engineers to accurately predict the acoustical and mechanical performance of JBL sound systems. The advanced acoustic engine generates high-resolution simulations to accurately match real-life performance, while the sophisticated mechanical engine generates precise system reports and array statistics.

https://jblpro.com/en-US/products/venue-synthesis



5.2 ARRAY LINK™

Array Link™ is a mobile companion app that works in conjunction with Venue Synthesis to assist in deployment of SRX900 systems. Array Link uses a QR code system to transfer all mechanical array information from the Venue Synthesis application to a mobile phone. All relevant rigging and mechanical options are presented in an easy-to-understand layout. The application is compatible with iOS® and Android™ and can be obtained from their respective app stores.



5.3 PERFORMANCE™

JBL Performance is the configuration and control application for networked SRX900 Series systems. The user interface guides the user through the complete system design, configuration, and control process with a thoughtful and visual workflow. A dedicated show mode provides all monitoring and control functions needed to deliver a complete picture of the system's performance in real time.

6 - SRX900 SERIES INTRODUCTION

THANK YOU FOR PURCHASING SRX900 SERIES PRODUCTS!

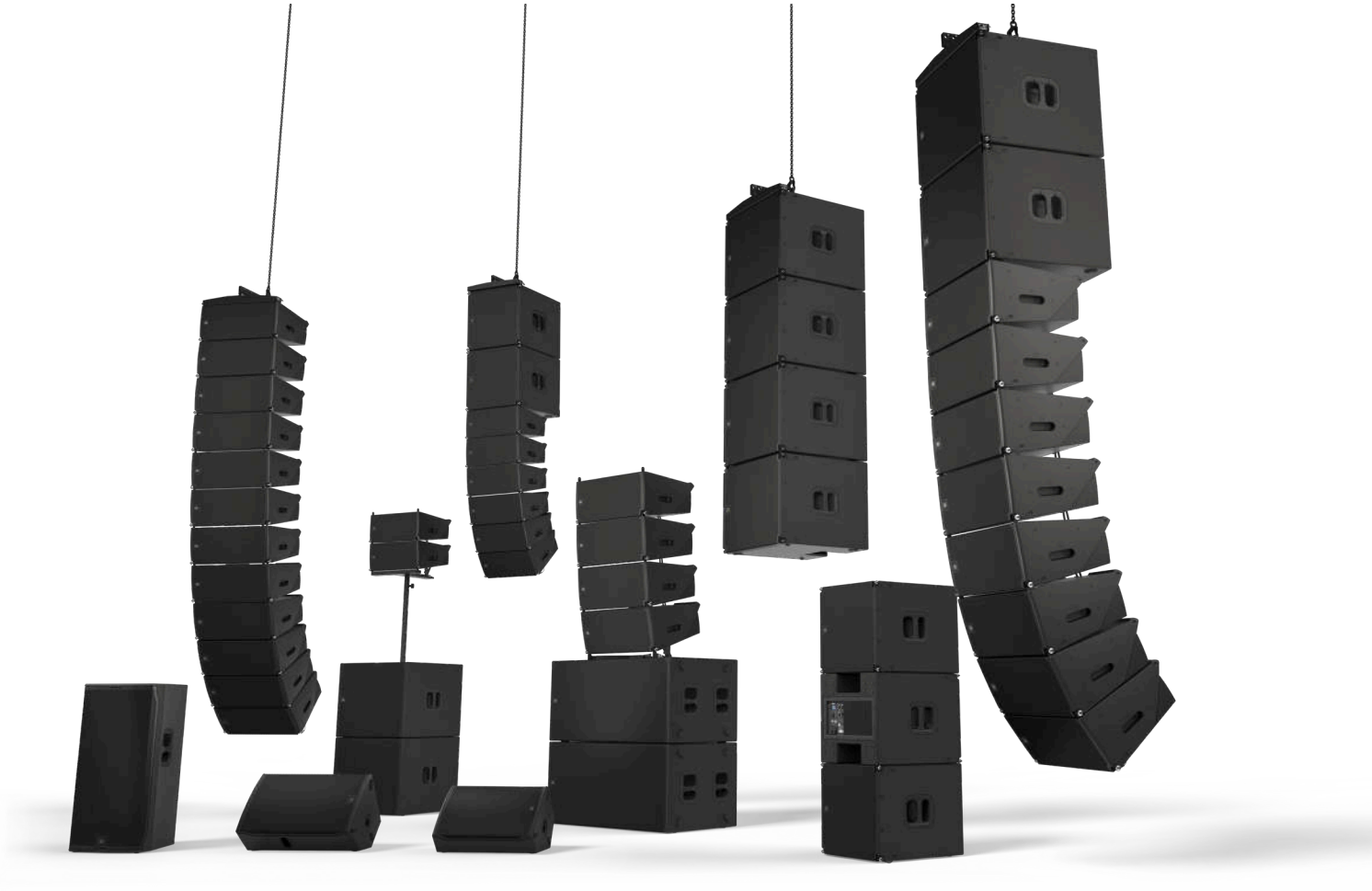

The SRX900 Series is engineered for professionals who demand great sound, flexible configuration options, and a scalable solution for small to medium-format sound reinforcement applications. The series combines best-in-class acoustic performance, efficient built-in amplification, sophisticated DSP, and an intuitive software experience to deliver a system that's powerful, capable, and easy to deploy.

Drawing on technologies developed for JBL's flagship touring systems, SRX900 delivers clean, detailed sound with controlled directivity, ensuring consistent performance across a wide range of use cases. JBL proprietary transducers, optimized waveguides, and rugged enclosures work together to deliver the reliable, dependable performance that defines JBL Professional.

The family offers the complete audio-reinforcement solution, with products covering all major loudspeaker categories and form factors. The lineup includes dual 6.5-inch and dual 10-inch line array speakers; 12-inch, 15-inch, and dual 12-inch point-source products; and 15-inch and 18-inch subwoofers designed for both flyable and ground-stacked configurations. Whether expanding an existing inventory or developing a new system, SRX900 provides modular flexibility that scales with system requirements, application needs, and budget. From live performers to production companies to installed sound environments, SRX900 delivers the ideal balance of value, performance, and professional-grade capability.

7 - AMPLIFIER MODULES

SRX900 products include a Class-D amplifier with built-in DSP providing optimum performance and a plug and play, easy-to-use experience. All speaker processing is performed using the internal processing, which includes the advanced LevelMax™ limiter suite, ensuring proper, reliable operation under any conditions. The SRX900 Series DSP also offers a user-adjustable input section for equalization, time alignment, and level adjustments. An LCD screen allows easy access to critical functions, including selecting operating modes, adjusting networking parameters, and basic DSP access. Two Ethernet ports utilize Harman's HControl protocol for external control using standard off-the-shelf Ethernet and WiFi equipment.

7.1 LINE-SOURCE AMPLIFIER PANEL

The SRX906LA and SRX910LA share the same rear panel layout and features. The illustrations and descriptions below apply to both models.

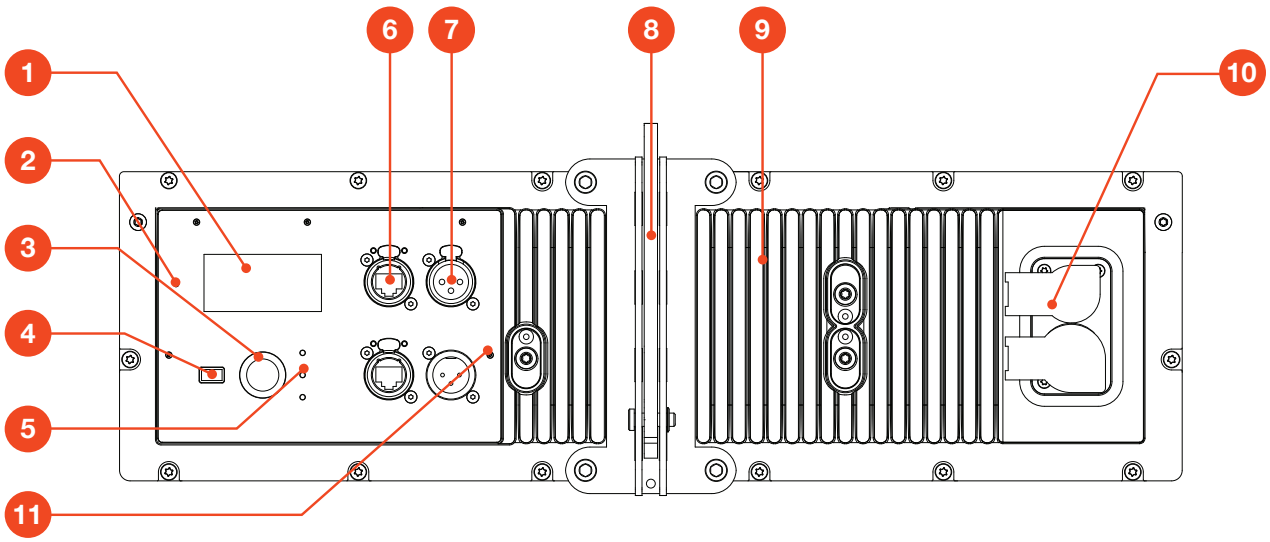

1 - LCD Screen: Allows users to access speaker operating modes, DSP parameters, networking settings, and much more. Controlled with the **Encoder** and the **Back** button. Refer to **Section 16-LCD** for more information on navigation and additional details on functionality.

2 - Locate LED: Software-controlled LED for speaker identification. The speaker can be set to Locate mode via JBL Performance software or from the LCD, for bidirectional visual identification of speaker. This is especially useful during setup, when physical speakers are matched with software equivalents.

3 - Encoder: Controls the LCD menus and the master volume of the unit. Turn the knob to navigate through the menus. Press the encoder to confirm an action or enter a menu. Refer to **Section 16-LCD** for more information on using the encoder to control the LCD screen.

4 - Back Button: Used in conjunction with the encoder to control the LCD screen.

5 - Signal/Limit/Power LED: These three LEDs provide visual feedback for critical speaker parameters, including power state, signal, and limiting and fault conditions. For additional information on LED functionality refer to **Section 9.5 - Power LED** and **Section 10.1 - Rear Panel Audio LEDs.**

6 - etherCON Connectors: Allow use of standard Ethernet cable to network multiple units and control the system. An internal Ethernet switch connects the two connectors together. Either connector can be used as the input or output. For more information on the

connectors, refer to **Section 11 - Networking**

7 - XLR Connectors: Input and output balanced XLR connectors for audio connectivity. The input connector passes signal directly from the input to the output, bypassing DSP for zero latency. The output connector continues to function even under power loss.

8 - Rigging Link Bar: Adjustable central rigging bar for connecting cabinets together and selecting angles. For more information refer to the **SRX900 Rigging Manual.**

9 - Amplifier Heatsink: Aluminum fins for cooling the SRX900 internal amplifier. No external fans are used for cooling the amplifiers.

10 - Power Connectors: Neutrik powerCON TRUE1® connectors for power connectivity. These ruggedized sealed connectors feature an IP65 rating as well as UL 50E certification for UV resistance. The input connector is used to supply power but also serves as the mains ON/OFF switch. The output connector can be used to connect multiple units together. Refer to **Section 9 - AC Power** for additional information on power connectivity and requirements.

11 - Mount Point for SRX900RC Rain Cover: Six M6 mounting points for attaching the SRX900 RC Rain Cover. The cover protects the screen, controls, and connectors from moisture. Refer to **Section 17 - Rain Cover** for more information.

7.2 POINT-SOURCE AMPLIFIER PANEL

The SRX912M, SRX915M and SRX922 share the same rear panel layout and features. The illustrations and descriptions below apply to both models.

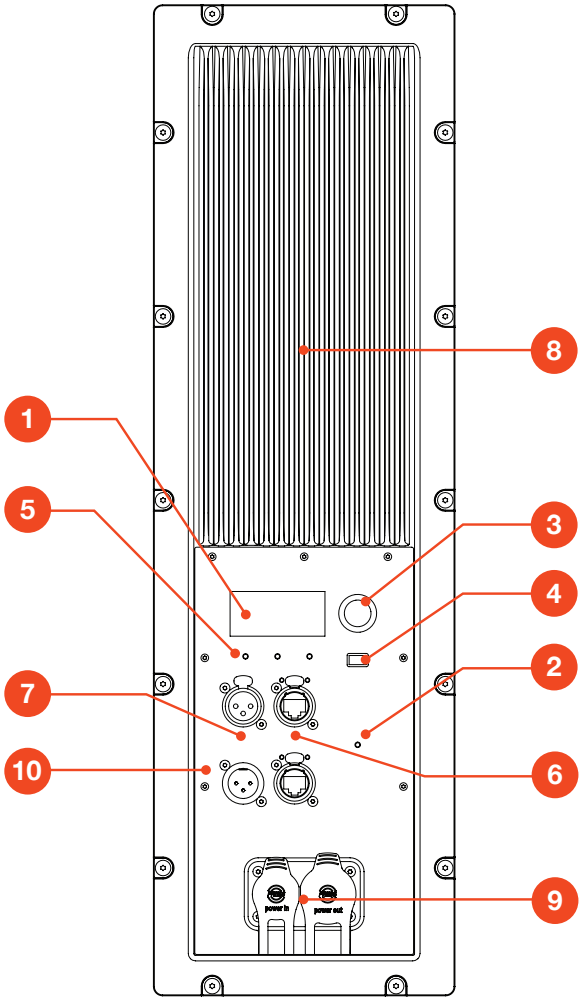

1 - LCD Screen: Allows users to access speaker operating modes, DSP parameters, networking settings, and much more. Controlled with the **Encoder** and the **Back** button. Refer to **Section 16 - LCD** for more information on navigation and additional details on functionality.

2 - Locate LED: Software-controlled LED for speaker identification. The speaker can be set to Locate mode via JBL Performance software or from the LCD, for bidirectional visual identification of speaker. This is especially useful during setup, when physical speakers are matched with software equivalents.

3 - Encoder: Controls the LCD menus and the master volume of the unit. Turn the knob to navigate through the menus. Press the encoder to confirm an action or enter a menu. Refer to **Section 16 - LCD** for more information on using the encoder to control the LCD screen.

4 - Back Button: Used in conjunction with the encoder to control the LCD screen.

5 - Signal/Limit/Power LED: These three LEDs provide visual feedback for critical speaker parameters, including power state, signal, and limiting and fault conditions. For additional information on LED functionality refer to **Section 9.5 - Power LED** and **Section 10.1 - Rear Panel Audio LEDs.**

6 - etherCON Connectors: Allow use of standard Ethernet cable to network multiple units and control the system. An internal Ethernet switch connects the two connectors together. Either connector can be used as the input or output. For more information on the connectors, refer to **Section 11 - Networking**

7 - XLR Connectors: Input and output balanced XLR connectors for audio connectivity. The input connector passes signal directly from the input to the output, bypassing DSP for zero latency. The output connector continues to function even under power loss.

8 - Amplifier Heatsink: Aluminum fins for cooling the SRX900 internal amplifier. No external fans are used for cooling the amplifiers.

9 - Power Connectors: Neutrik powerCON TRUE1® connectors for power connectivity. These ruggedized sealed connectors feature an IP65 rating as well as UL 50E certification for UV resistance. The input connector is used to supply power but also serves as the mains ON/OFF switch. The output connector can be used to connect multiple units together. Refer to **Section 9 - AC Power** for additional information on power connectivity and requirements.

10 - Mount Point for SRX900RC Rain Cover: Six M6 mounting points for attaching the SRX900 RC Rain Cover. The cover protects the screen, controls, and connectors from moisture. Refer to **Section 17 - Rain Cover** for more information.

7.3 SUBWOOFER AMPLIFIER PANEL

The SRX915SF, SRX918S/SF and SRX928S share the same rear panel layout and features. The illustrations and description below apply to both models.

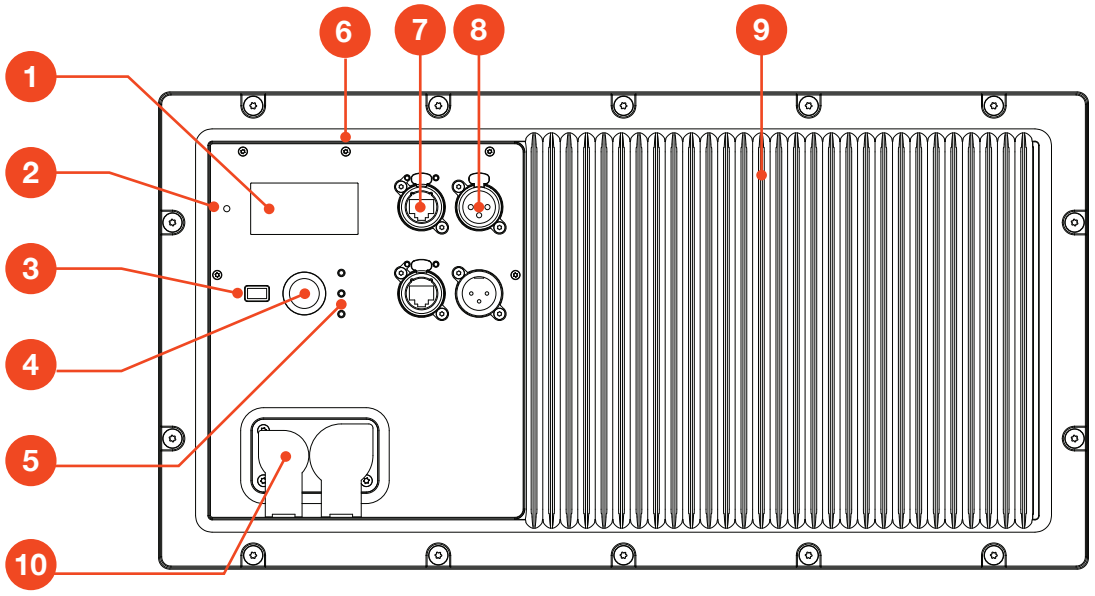

1 - LCD Screen: Allows users to access speaker operating modes, DSP parameters, networking settings, and much more. Controlled with the **Encoder** and the **Back** button. Refer to **Section 16 - LCD** for more information on navigation and additional details on functionality.

2 - Locate LED: Software-controlled LED for speaker identification. The speaker can be set to Locate mode via JBL Performance software or from the LCD, to bi-directionally visually identify the speaker. This is especially useful during setup, when physical speakers are matched with software equivalents.

3 - Encoder: Controls the LCD menus and master volume of the unit. Turn the knob to navigate through the menus. Press the encoder to confirm an action or enter a menu. Refer to **Section 16 - LCD** for more information on using the Encoder to control LCD screen.

4 - Back Button: Used in conjunction with the Encoder to control the LCD Screen.

5 - Signal / Limit / Power LED: These three LEDs provide visual feedback for critical speaker parameters, including power state, signal, and limiting and fault conditions. For additional information on LED functionality refer to **Section 9.5 - Power LED** and **Section 10.1 - Rear Panel Audio LEDs.**

6 - Mount Point for SRX900RC Rain Cover: Six M6 mounting points for attaching the SRX900RC Rain Cover. The cover protects the screen, controls, and connectors from moisture. Refer to **Section 17 - Rain Cover** for more information.

7 - EtherCon Connectors: Allows use of a standard Ethernet cable to network multiple units and control the system. An internal Ethernet switch connects the two connectors together. Either connector can be used as the input or output. For more information no the connectors refer to **Section 11 - Networking**.

8 - XLR Connectors: Input and output balanced XLR connectors for audio connectivity. The input connector passes signal directly from the input to the output, bypassing DSP for zero latency. The output connector continues to function even under power loss.

9 - Amplifier Heatsink: Aluminum fins for cooling the SRX900 internal amplifier. No external fans are used for cooling the amplifiers.

10 - Power Connectors: Neutrik powerCON TRUE1 connectors for power connectivity. These rugged sealed connectors feature an IP65 rating as well as UL 50E certification for UV resistance. The input connector is used to supply power, but also serves as the mains ON/OFF switch. The output connector can be used to connect multiple units together. Refer to **Section 9 - AC Power** for additional information on power connectivity and requirements.

8 - DSP OVERVIEW

A full suite of user-configurable DSP driven by the SRX900 Series' onboard 400 MHz SHARC DSP includes 24 parametric EQs, up to two seconds of delay, signal generators, monitoring, and device presets. Additionally, the system features 48 kHz 24-bit processing, LevelMax limiting, and is compatible with JBL's Performance Audio catalog of products.

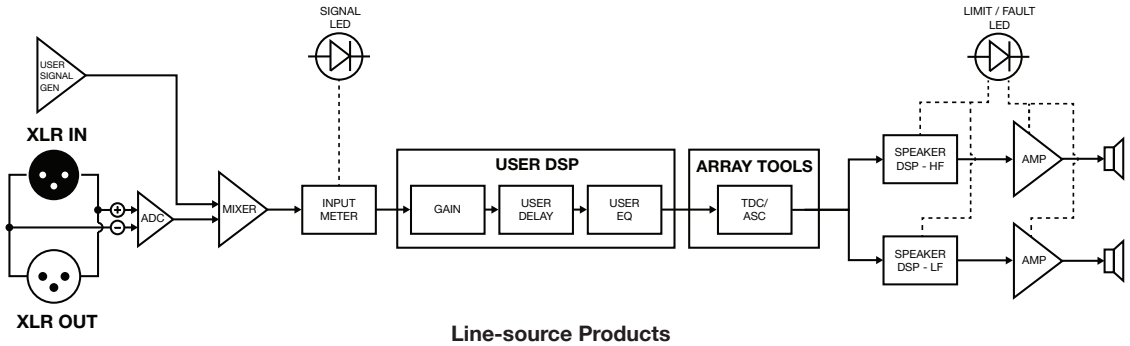

Line-source Products

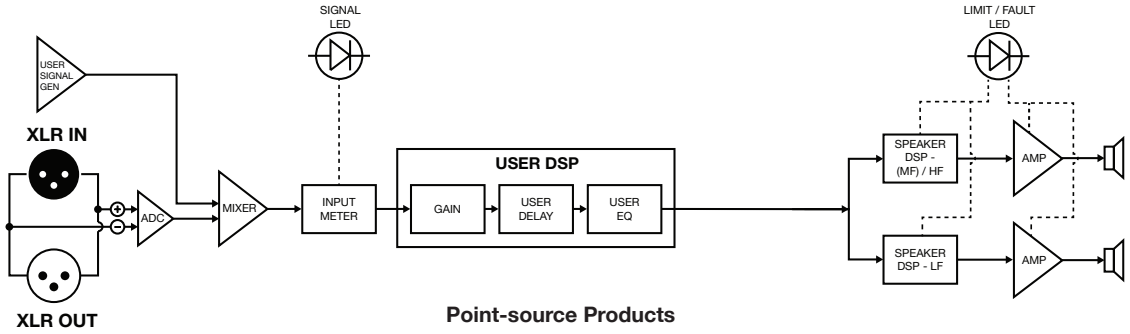

Point-source Products

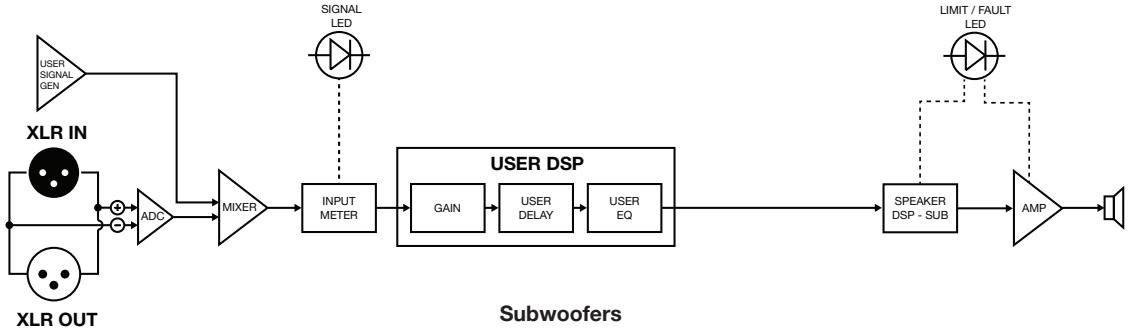

Subwoofers

9 - AC POWER

SRX900 products feature Neutrik powerCON TRUE1 connectors for power connectivity. TRUE1 connectors are locking 16 A (20 A for USA) mains connectors specifically designed for the demanding needs of the entertainment industry. These ruggedized sealed connectors feature an IP65 rating and provide protection from degradation caused by UV in outdoor applications certified to the UL 50E standard. Additionally, powerCON TRUE1 connectors feature breaking capacity (CBC), meaning the connectors can be connected or disconnected under active load. In the case of SRX900 Series products, the powerCON connectors also serve as the mains ON/OFF switch and no additional/secondary power switch is necessary.

TIP: One input and one output powerCON TRUE1 connector are included with all SRX900 products. Additional connectors can be purchased from authorized Neutrik resellers.

9.1 AC VOLTAGE REQUIREMENTS

The SRX900 Series amplifier module includes a universal power supply with Power Factor Correction (PFC), which can be used on any line voltage from 90 V to 250 V depending on the region, the type of wiring, and the power distribution panels available. When the line voltage goes above or below the set voltage limits, a protection circuit engages to protect the amplifier from damage. In this case, power to the loudspeaker is interrupted and the power LED at the back of the speaker flashes green to notify the user of improper incoming power.

9.2 POWER CONNECTORS

SRX900 Series products include two powerCON TRUE1 connectors, one for AC input and one for AC output/loop through. The loop through connector allows multiple products to be powered from a single power source. Rubber sealing covers are used to maintain proper water ingress protection when a connector is not in use.

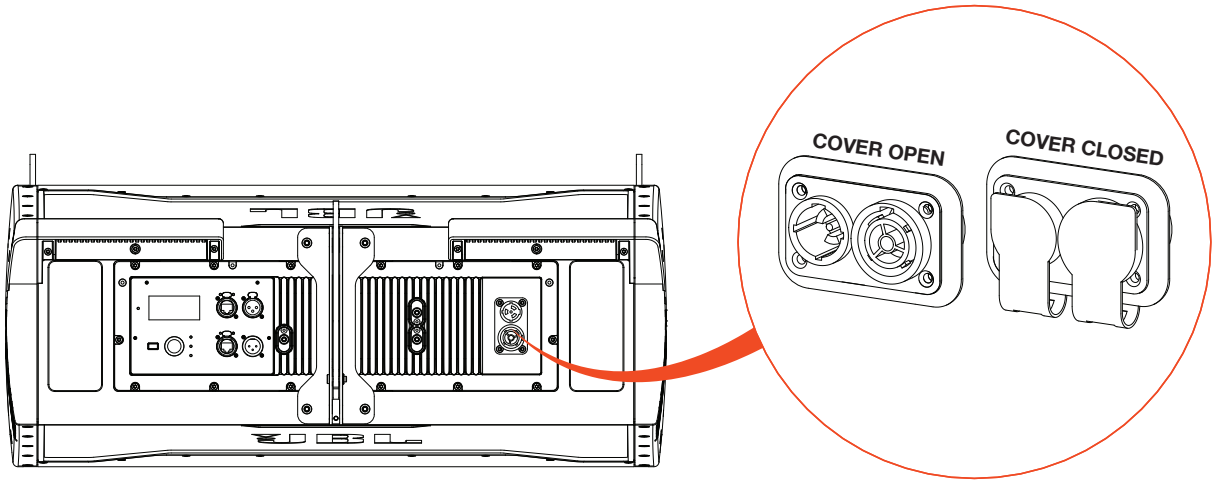

The maximum number of loudspeakers that can be looped from the AC output connector is determined by the voltage of the power source, the type of the looped loudspeakers (subwoofers vs full-range, etc.), and the circuit breaker rating. In general, the higher the line voltage, the lower the current consumption and the greater the number of speakers that can be used on a single line is. Using too many speakers looped together will not damage the speakers, but it will trip the mains breaker and interrupt audio once the breaker rating has been reached.

TIP: For detailed single cabinet current draw specifications refer to the **product specification sheets** available for download at www.jblpro.com. Current draw and inrush values for a variety of input voltages are available.

9.3 CURRENT DRAW

The table below serves as a general guideline on the number of SRX900 speakers that can be connected together to a single power line. As previously discussed, the exact current draw of a speaker can by influenced by a number of factors, including the input voltage, music type, and cable length. The numbers below serve as a starting point and do not guarantee uninterrupted operation.

NUMBER OF SPEAKERS PER POWER LINE				
	100 V | 15 A	120 V | 15 A	208 V | 15 A	240 V | 16 A
SRX906LA	(5)	(6)	(10)	(12)
SRX910LA:	(3)	(4)	(7)	(8)
SRX912M	(4)	(5)	(8)	(10)
SRX915M	(3)	(4)	(8)	(9)
SRX922	(2)	(2)	(3)	(4)
SRX915SF	(2)	(2)	(3)	(4)
SRX918SF	(2)	(2)	(3)	(4)
SRX918S	(2)	(2)	(3)	(4)
SRX928S	(1)	(1)	(3)	(3)

CAUTION: The numbers provided in the table above serve as a starting point and do not guarantee uninterrupted operation. Always make sure sufficient power is available to maintain operation at full output.

CAUTION: The number of speakers connected to the same power line should take into consideration the total in-rush requirements of the speakers and the inrush capabilities of the circuit breaker. Check inrush requirements on the product specification sheets.

9.4 POWER STATES

SRX900 Series speakers can be set to one of two power modes. See **Section 15 - LCD** for information on how to change between power modes via the rear LCD.

- **Always ON**: This is the default power mode. In this case, the speaker will remain always ON and consuming the idle power listed in the product specification sheets.
- **Auto Standby**: The amplifier can be set to automatically conserve power after the audio drops below a specified level for a specified amount of time. When activated, auto standby reduces the idle current draw and is recommended for situations where loudspeakers are always connected to power but not always used. Amplifiers switch ON instantaneously once signal is applied. This feature can be switched ON/OFF via the LCD or configured via JBL Performance software. The audio level threshold can only be adjusted from JBL Performance.

9.5 POWER LED

The power LED displays the current power status as stated below:

- **OFF**: No power is available.
- **Solid GREEN**: Power is connected and the speaker is active with no errors.
- **Fast flashing GREEN**: Power is available but the input voltage is below or above the safe operating range for the amplifier. The LED will continue to flash until power falls within range. In this state, the LCD, DSP, and amplifier are all OFF
- **Slow, GREEN fade-in/fade-out**: Power is available without errors. The speaker is in Standby mode. In this case, the LCD display is OFF.

10 - AUDIO CONNECTIVITY

SRX900 products are equipped with a balanced line level analog input for interfacing with external audio equipment such as mixing consoles. The balanced line input can accept signals of up to **+21 dBu** and has an input impedance of **100 kOhm**. The male XLR output connector allows multiple loudspeakers to be connected together from a single output. The output connector is wired directly to the input and continues to function under a power loss condition.

Point-source

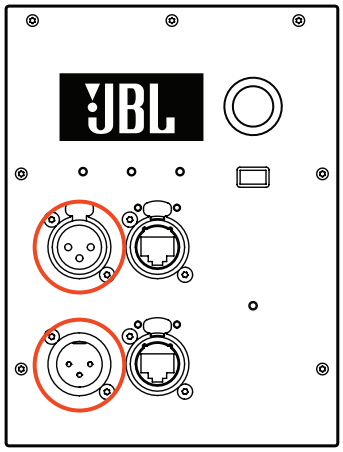

Line-source / Subwoofer

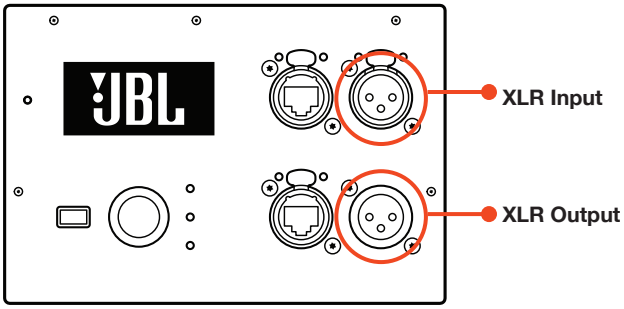

XLR Pin Configuration:

- Pin 1: Ground
- Pin 2: Signal (+)
- Pin 3: Signal (-)

When daisy chaining multiple SRX900 devices together, it is necessary to maintain a 10x relationship between the destination and source impedances. For example, the mixing console has an output impedance of 100 Ohms, the combined total input impedance of all SRX900 cabinets would need to be no less than 1,000 Ohms (1 kOhm). Since the input impedance of the amplifier module is 100 kOhms, a maximum of 100 devices would be allowed on an XLR daisy chain in this example.

10.1 REAR PANEL AUDIO LEDS

Two LEDs are available on the rear panel to provide visual feedback on system drive. The Signal LED turns green when signal level higher than -60 dBu is applied at the input, and red when the input signal is clipping the input. The Limit LED turns orange when greater than 3 dB of limiting is engaged on one or both amplifier channels (LF/HF). This LED is linked to the DSP-based LevelMAX™ limiter and can be activated by the Peak, RMS, or thermal limiter. Limiting is not uncommon and will not damage the transducers or the amplifier. When the Limit light is solid orange, it means that the system is being driven beyond its capacity and action should be taken to reduce the input level. In the event that the limit LED remains lit solid when no audio is present at the input, the amplifier is in a fault condition and may require service.

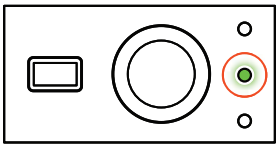

SIGNAL LED GREEN

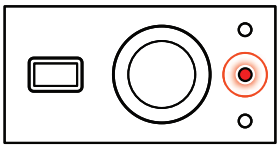

SIGNAL LED RED (CLIP)

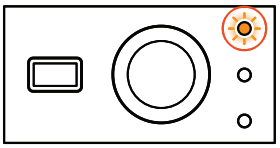

LIMIT LED BLINKING

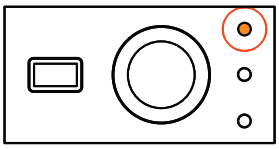

LIMIT LED SOLID

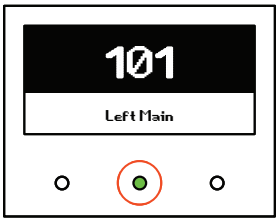

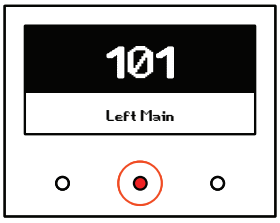





10.2 EXAMPLE: SMALL SYSTEM AUDIO WIRING

In this example, a small SRX900 system is fed from the left and right outputs of a mixer. The signal loops from the subwoofers to the mains.

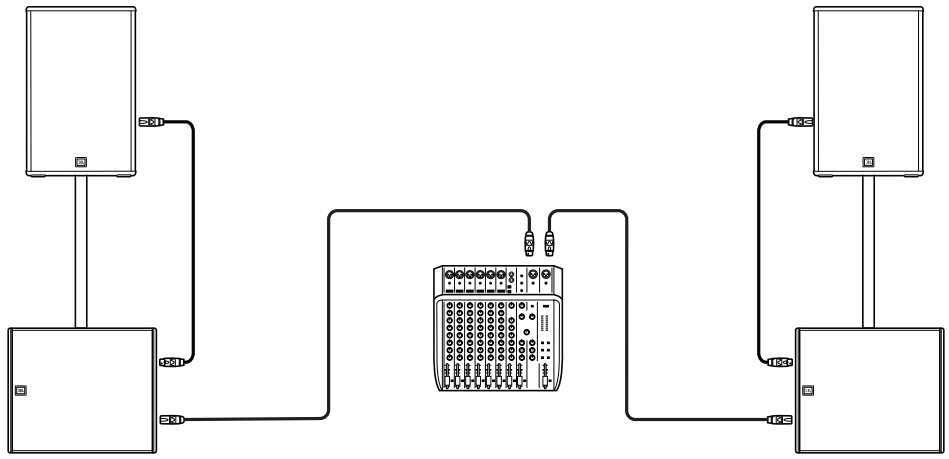

10.3 EXAMPLE: LARGE SYSTEM AUDIO WIRING

In this example, a large SRX900 system consisting of SRX910LA suspended mains and SRX928S subwoofers is fed from three separate signals: left and right sends for the mains and an auxiliary send for the subs. The signal loops though all devices for each feed.

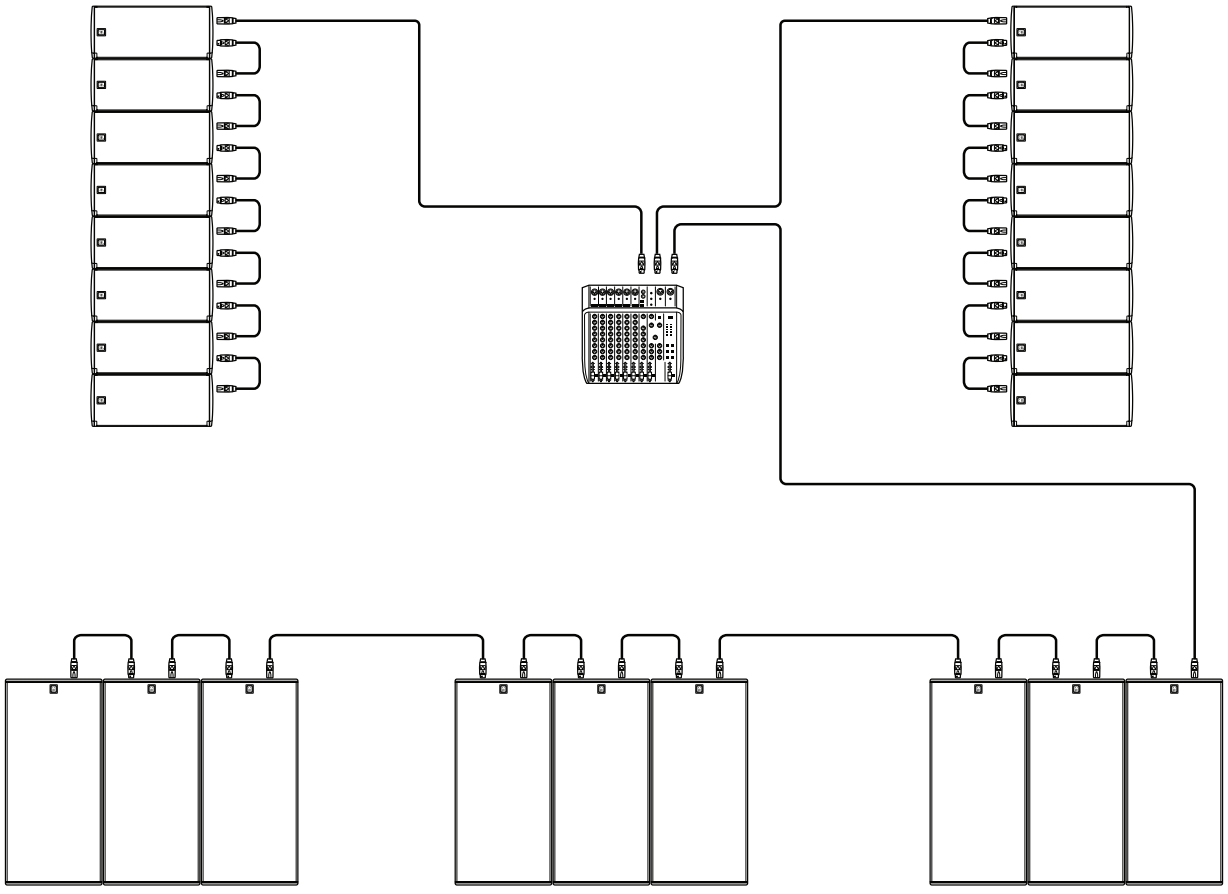

11 - NETWORKING

All SRX900 devices communicate using standard TCP/IP data protocols, and so, like all typical network devices, need a set of unique addresses to communicate with similar devices on the network, and with the control device running Performance software. In general, SRX900 devices require the following types of properly configured addresses:

- **IP Address**
- **Subnet Mask**

11.1 IP ADDRESSES

IP addresses are used to identify and facilitate network communication between individual devices on a local network. Each SRX900 device within a network requires a unique IP address within a compatible subnet to correctly communicate to the rest of the devices on the network. IP addresses can be assigned manually by the user, or set automatically by the devices themselves or a DHCP server on the network. Once IP addresses are set for SRX900 devices and all devices have been verified as being visible and non-conflicting on the network, it is not necessary for the user to remember the IP address of each device.

IP Address Example: 169.254.12.192

11.2 SUBNET MASK

Every IP address is made up of two unique parts, a host address and a network address. An IP address requires a subnet mask to indicate which part of the address is the host address and which part the network address. It is important for all SRX900 devices on the network to have the same subnet mask to enable them to communicate without requiring advanced routing configurations.

Subnet Mask Example: 255.255.0.0

11.3 NETWORK CONFIGURATION FOR SRX900 DEVICES

SRX900 devices on a network can be set to either automatically get IP and subnet addresses (DHCP) or be programmed manually by the user. Modes can be changed from the rear LCD screen or from JBL Performance software utilizing the NetSetter tool.

- **DHCP (recommended)** - In this mode, IP address and subnet mask information for each device are automatically assigned by a DHCP server. If no DHCP server is present, the devices will rely on the APIPA (Automatic Private IP Addressing) standard to self-negotiate IP address and subnet mask information. In most configurations where SRX900 devices are not connected to a strictly managed or mixed use network, DHCP configuration is the fastest and easiest way to configure all devices and get a system online.
- **Static IP** - In this mode, the user is responsible for configuring the IP address and subnet mask of every SRX900 device, as well as the control device on the network. Each device must be assigned the same subnet mask and a unique IP address within the subnet mask's range. IP address and subnet mask values can be entered from the rear LCD or from the NetSetter tool within JBL Performance control software.



TIP: For more information on setting the IP address mode from the rear LCD, see **Section 15 - LCD**. For more information on setting the IP address mode from JBL Performance software, see the **Performance User Guide** available at www.jblpro.com.

11.4 ETHERNET PORTS

SRX900 Series amplifier modules are equipped with two fully switched network ports. These ports are used for all data communication between the amplifier module and the control device running JBL Performance control software. Because these two ports are fully switched, devices can be daisy chained together to simplify cabling. The standard RJ45 ethernet jack is encapsulated in a Neutrik etherCON® receptacle and can be used with standard RJ45 connectors or etherCON-style connectors for a rugged connection.

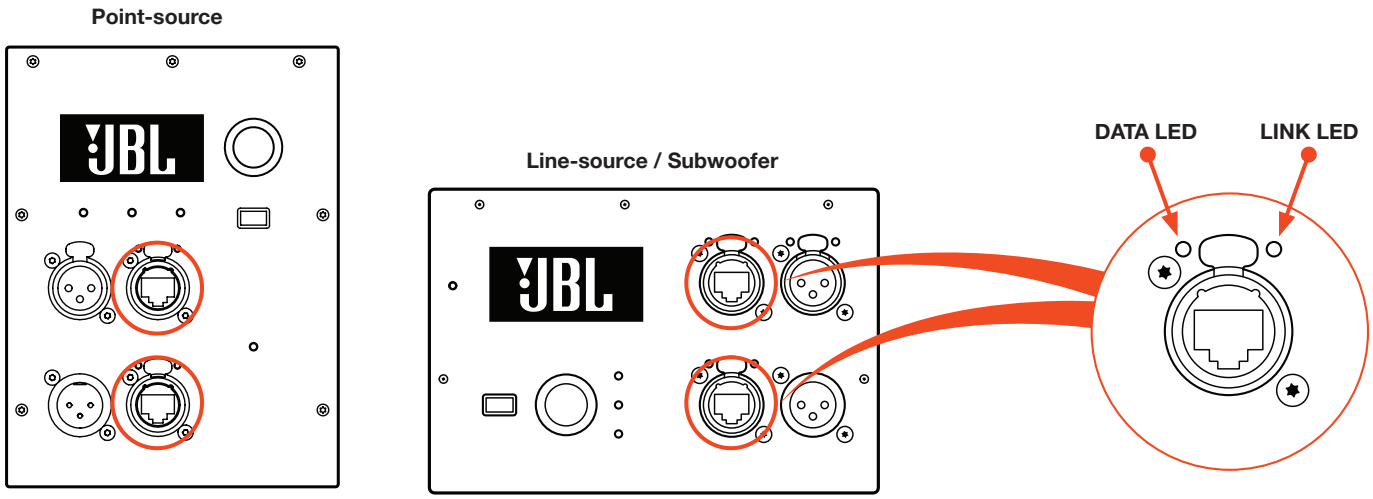

11.5 NETWORK TOPOLOGIES

Three unique network topologies exist for connecting SRX900 Series systems: Daisy Chain, Star, and a Hybrid Daisy Chain/Star. Each topology is pictured below with a diagram depicting how the system should be wired. Every SRX900 system setup is unique, therefore no single network setup is universally correct. However, there are pros and cons of each setup that are listed with its wiring diagram.

Daisy Chain Network Topology

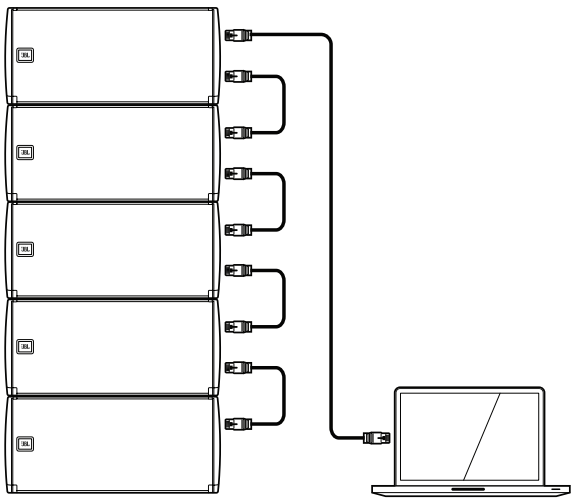

Pros

- Simple and easy
- Ideal for smaller systems
- Minimal wiring requirements
- Requires no additional network switches.

Cons

- Not recommended for large systems
- Possibility of single point of failure

Star Network Topology

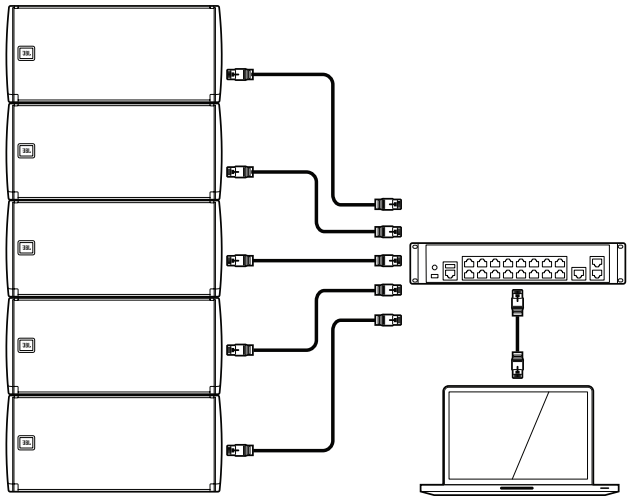

Pros

- Fast and reliable
- Ideal for large installation where IT is involved
- No single point of failure
- Minimizes device-to-device switch hops

Cons

- Complex and expensive wiring
- Requires external Ethernet equipment
- **Not recommended for arrays of speakers**

Hybrid Daisy Chain and Star Network Topology

Combines the best of both topologies into a production-friendly design that is easy to deploy, easy to cable, minimizes switch hops, and provides a degree of reliability against power failure.

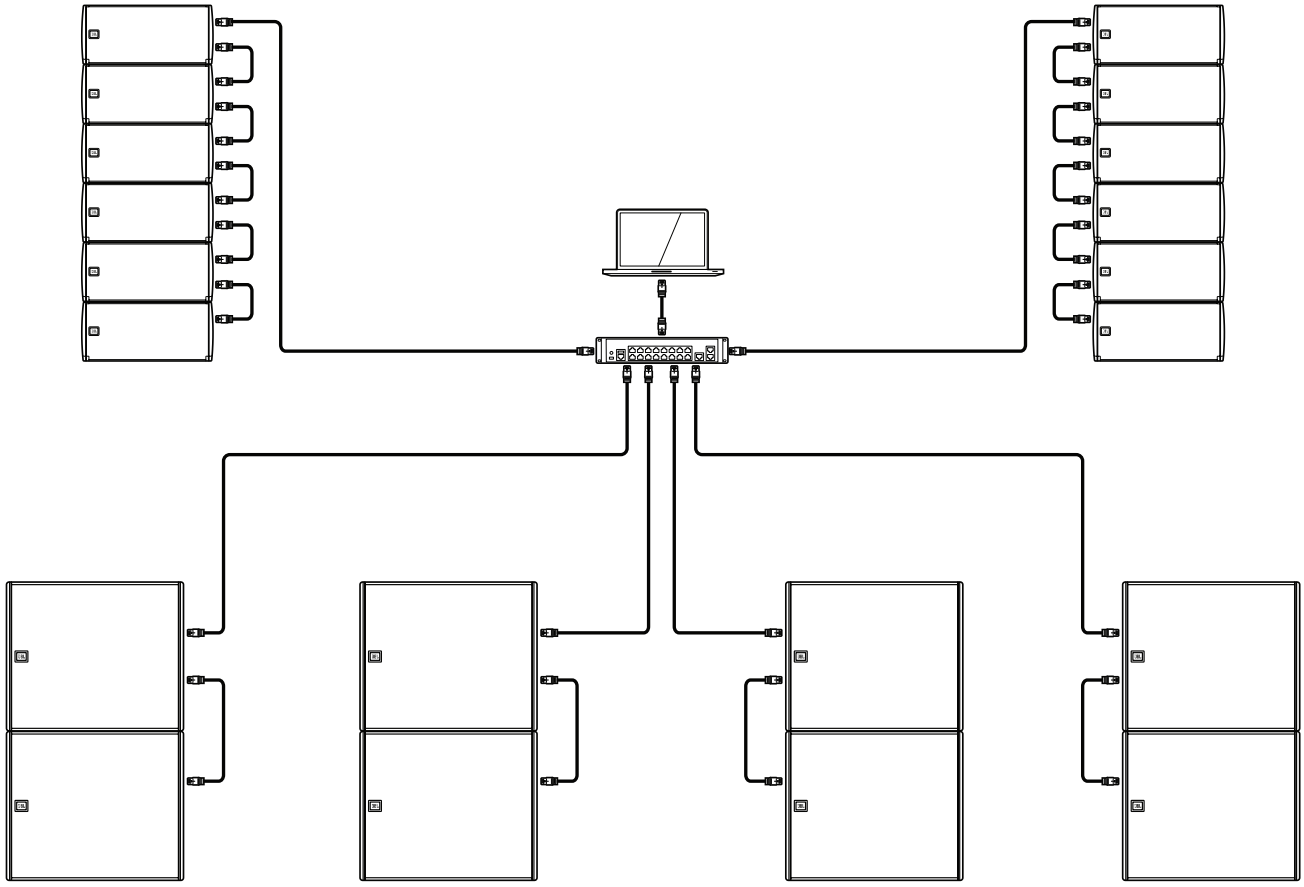

12 - HCONTROL

SRX900 Series speakers utilize the Harman HControl communication protocol to send messages between devices and applications such as JBL Performance. HControl is standard TCP/IP traffic and can use off-the-shelf network switches and Wi-Fi access points. HControl can co-exist with other standard network traffic such as HiQNet, Dante, AES 67, and internet traffic on a shared network. HControl is an Open Systems Interconnect (OSI) Layer 7 (application layer) protocol, registered with the Internet Assigned Numbers Authority (IANA) as operating over Transmission Control Protocol (TCP) and Uniform Datagram Protocol (UDP) on port 4197.

12.1 HCONTROL ID

HControl IDs (HCID) are designed to provide users with an easy way to match real devices and virtual devices, regardless of network address or configuration. HCIDs are used to give each device a numeric identifier up to six digits long. Each hardware device has a fixed HCID set at the factory that the user can modify, either on the device LCD (See **Section 16 - LCD** for more information) or in JBL Performance, using the integrated NetSetter tool. The HCID can also be locked from the LCD menu to restrict changes from software.

12.2 HCID USE CASES

JBL Performance software offers a visually intuitive layout of devices in software that mimics the real-world design of the system. Matching the actual hardware to the correct virtual device is the first step in getting the system online. If hardware HCIDs are known, a user can pre-program the ID in the corresponding virtual location in the software. When the network is up, simply click “Auto Match” in Connect mode, and the software will automatically match the hardware to the virtual devices. When setting HCID addresses on the hardware, it is best to choose logical blocks of numbers that are easy to recognize.

12.3 EXAMPLE SYSTEM HCID ADDRESSING

The following example illustrates a recommended approach to addressing devices in a mid-sized system.

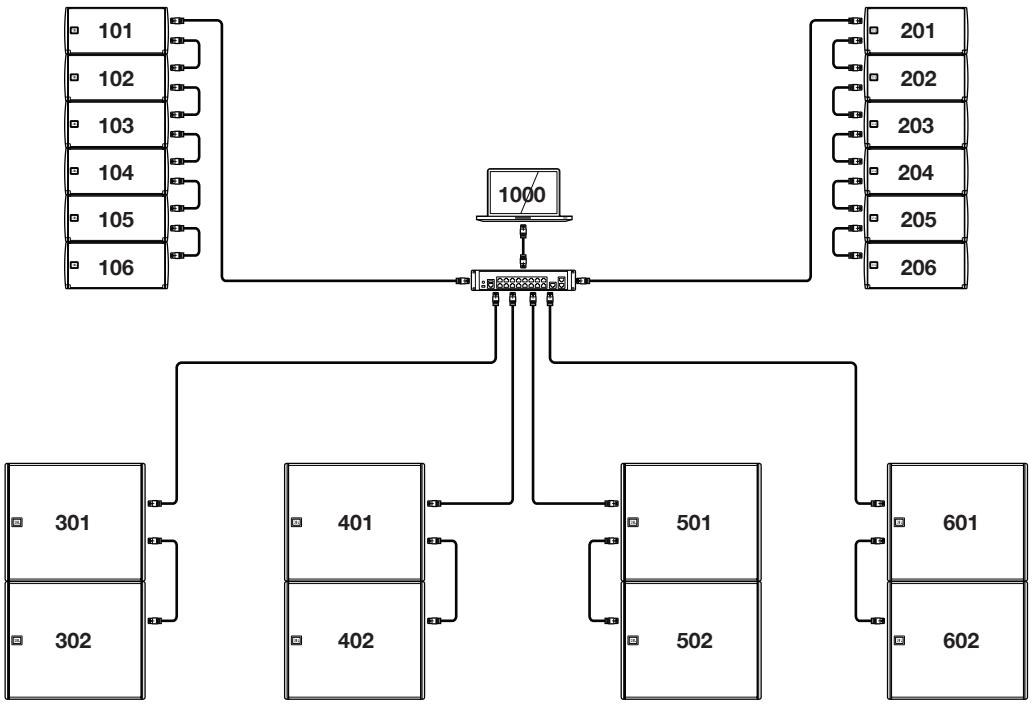

13 - SPEAKER PRESETS

SRX900 Series speakers have dedicated speaker presets created by JBL engineers to optimize the system for a given use case. These presets are embedded in the device firmware and may be updated by JBL to further improve performance. They can be recalled and changed independently of the user DSP and are not editable by the end user.

13.1 LINE-SOURCE MODES

SRX900 Series line arrays can be operated in one of three modes depending on the application and the number of speakers within an array. Operating modes are designed to create a neutral starting point and alter the tonal balance of the speakers to compensate for low frequency changes caused by array conditions. Select the most appropriate mode for the application at hand via the LCD panel or software.

FILL: The FL presets (short for FILL) have nominally flat frequency response and are used in situations where individual SRX900 cabinets are appropriate, such as distributed front fills. This mode is available for both the SRX906LA and SRX910LA.

SMALL ARRAY (SA): The SA preset (short for Small Array) is appropriate in situations where two or three SRX906LA cabinets are placed on a pole on top of subwoofers. A gentle high frequency shelving response is applied to offset LF/MF array buildup for arrays of two to three cabinets. This mode is exclusive to the SRX906LA, since the SRX910LA cannot be pole mounted.

ARRAY: This is the standard preset for array use. This preset is available for both models and should be used in all situations where four or more speakers are used. A high frequency shelving response is applied to offset LF/MF array buildup for nominally focused arrays (equally spaced impact points over the desired audience coverage area). This mode is compatible with the Array Size Compensation filter, which can further shape the array buildup for longer arrays.

Low frequency options:

Each line array mode is available in two variants, full-range or 80 Hz. In full-range mode, the acoustical low frequency response of the system extends as low as possible and should be used when the system is operated without subwoofers. The 80 Hz option is used when subwoofers are available and when the highest A-weighted sound pressure level (SPL) is required.

13.2 POINT-SOURCE MODES

SRX900 Series point-source products can be operated in one of two modes depending on the application and specific product. Operating modes are designed to create a neutral starting point and alter the tonal balance of the speakers to compensate for different conditions. Select the most appropriate mode for the application at hand via the LCD panel or software.

POINT-SOURCE (PS): The PS presets (short for point-source) have nominally flat frequency response and are used in situations where SRX900 cabinets are used as mains. This mode is available for all SRX900 point-source products.

MONITOR (MON): The MON preset (short for Monitor) is appropriate in situations where SRX900 point-source products are used as stage monitors. LF compensation is applied to offset ground-floor loading conditions. In this mode, a low-latency DSP mode is activated resulting in a total system latency of 2.7 ms. This mode is exclusive to the SRX912M and SRX915M multi-purpose, point-source speakers.

Low frequency options:

Each point-source mode is available in two variants, full-range or 80 Hz. In full-range mode, the acoustical low frequency response of the speakers extends as low as possible and should be used when the products are operated without subwoofers. The 80 Hz option is used when subwoofers are available and when the highest A-weighted sound pressure level (SPL) is required.

13.3 SUBWOOFER PRESETS

Low frequency options:

The SRX900 subwoofers support two modes 60 Hz or 80 Hz. When subwoofers are used together with SRX900 full-range products, 80 Hz mode should always be selected.

Orientation: Forward or Rear

By default, a subwoofer is set as Forward for normal operation. In properly configured subwoofer arrays, a subwoofer's physical orientation can be changed, which with proper DSP settings, will improve rejection behind the subwoofer array and improve the forward response. The Rear setting will automatically recall the proper DSP settings to optimize the subwoofer for this configuration, which is often referred to as a "cardioid subwoofer array". See **Section 15 - Subwoofer Orientation** for additional information regarding forward and rear-facing subwoofers and how to deploy a cardioid subwoofer array.



CAUTION: When subwoofers are available, the SRX900 full-range speakers should always be operated in the 80 Hz mode, which produces the highest A-weighted sound pressure level (SPL) and reduces amplifier resources.

13.4 SRX906LA PRESET EXAMPLES

All three preset modes include Full-Range and 80 Hz HPF options.

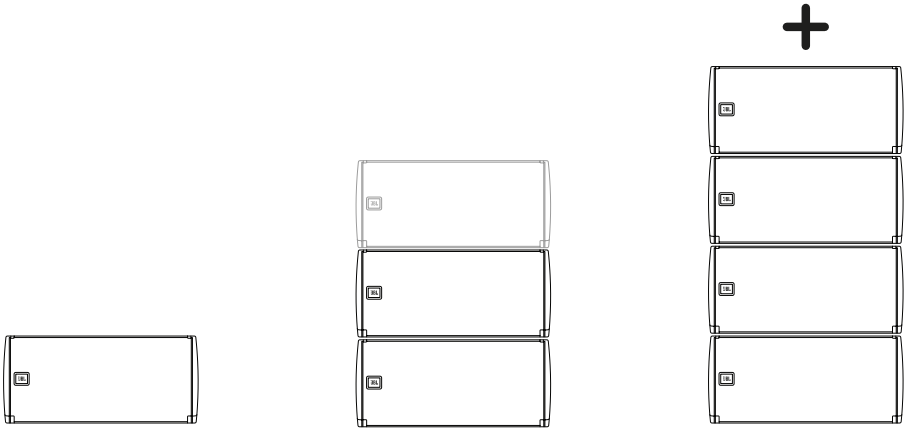

1 SRX906LA
MODE: FILL

2-3 SRX906LA
MODE: SA

4+ SRX906LA
MODE: ARRAY

13.5 SRX910LA PRESET EXAMPLES

Both preset modes include Full-Range and 80 Hz HPF options.

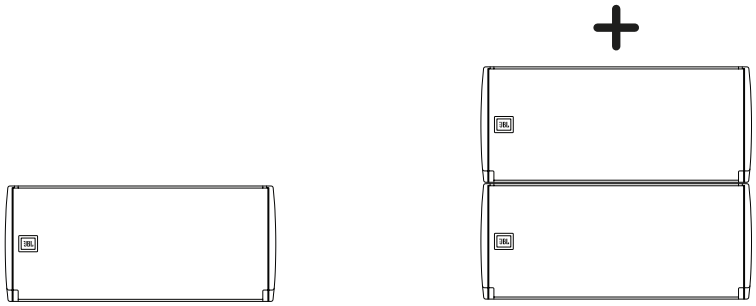

1 SRX910LA
MODE: FILL

2+ SRX910LA
MODE: ARRAY

13.6 SRX900M PRESET EXAMPLES

Select the appropriate preset mode for the application. Use Monitor mode (MON) only for stage monitor use with the SRX912M or SRX915M. Select the 80 Hz options when subwoofers are available.

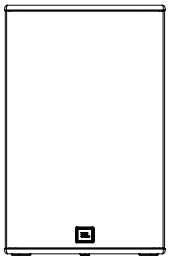

SRX912M/SRX915M as Mains
MODE: PS



SRX912M/SRX915M as a Front-fill
MODE: PS

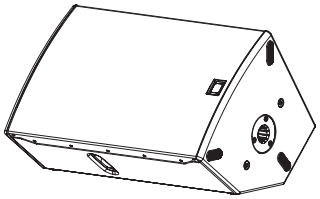

SRX912M/SRX915M as Monitor
MODE: MON

14 - ARRAY CALIBRATION

SRX900 Series line-source speakers have two dedicated, user-adjustable filters designed to quickly tailor the tonal response of an array. Each filter serves a specific intended purpose to accelerate the tuning process. Both filters can be applied quickly to all elements in an array from JBL Performance software, or to array elements one at a time from the LCD on the rear of the cabinets. For more information on applying Array Calibration filters from the LCD, see **Section 16 - LCD,** and for information on applying calibration filters from Performance control software see the **Performance User Guide** available at www.jblpro.com

14.1 FILTER 1 - ARRAY SIZE COMPENSATION (ASC)

The Array Size Compensation (ASC) filter is designed to work in conjunction with the array presets and it can be used to reduce the energy created by the coupling effects of arrays in the mid and low frequencies, and bring the array closer to the desired tonal response. LF adjustments should be applied equally to all cabinets within the array. ASC values can depend on the shape of the array, the acoustics of a room, or preference. Adjust ASC up or down to achieve the desired tonal result.

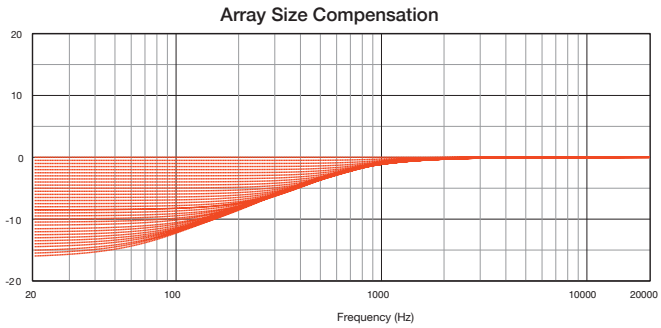

14.2 FILTER 2 - THROW DISTANCE COMPENSATION (TDC)

The Throw Distance Compensation (TDC) filter provides a linear phase, EQ and per-cabinet gain adjustment to optimize each array element for the air absorption effects of distance. TDC is typically applied on a per-cabinet basis, depending on the desired outcome, with the cabinets throwing further distances typically needing an HF boost, and cabinets throwing short distances needing HF reduction.

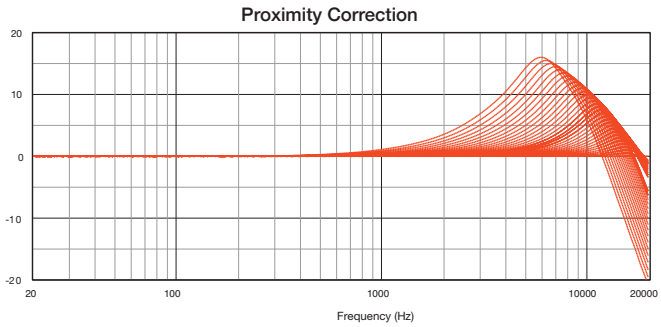



14.3 ARRAY CALIBRATION FILTER EXAMPLE

The example below represents a typical use case for the Array Calibration tool set. The 12-Box SRX906LA array shown below has Array Size Compensation (ASC) subtracted globally from all elements of the array. The individual speakers within the array have additional Throw Distance Compensation applied to improve long-throw performance and remove some excess HF that may be present due to the distance from the array to the front audience members.

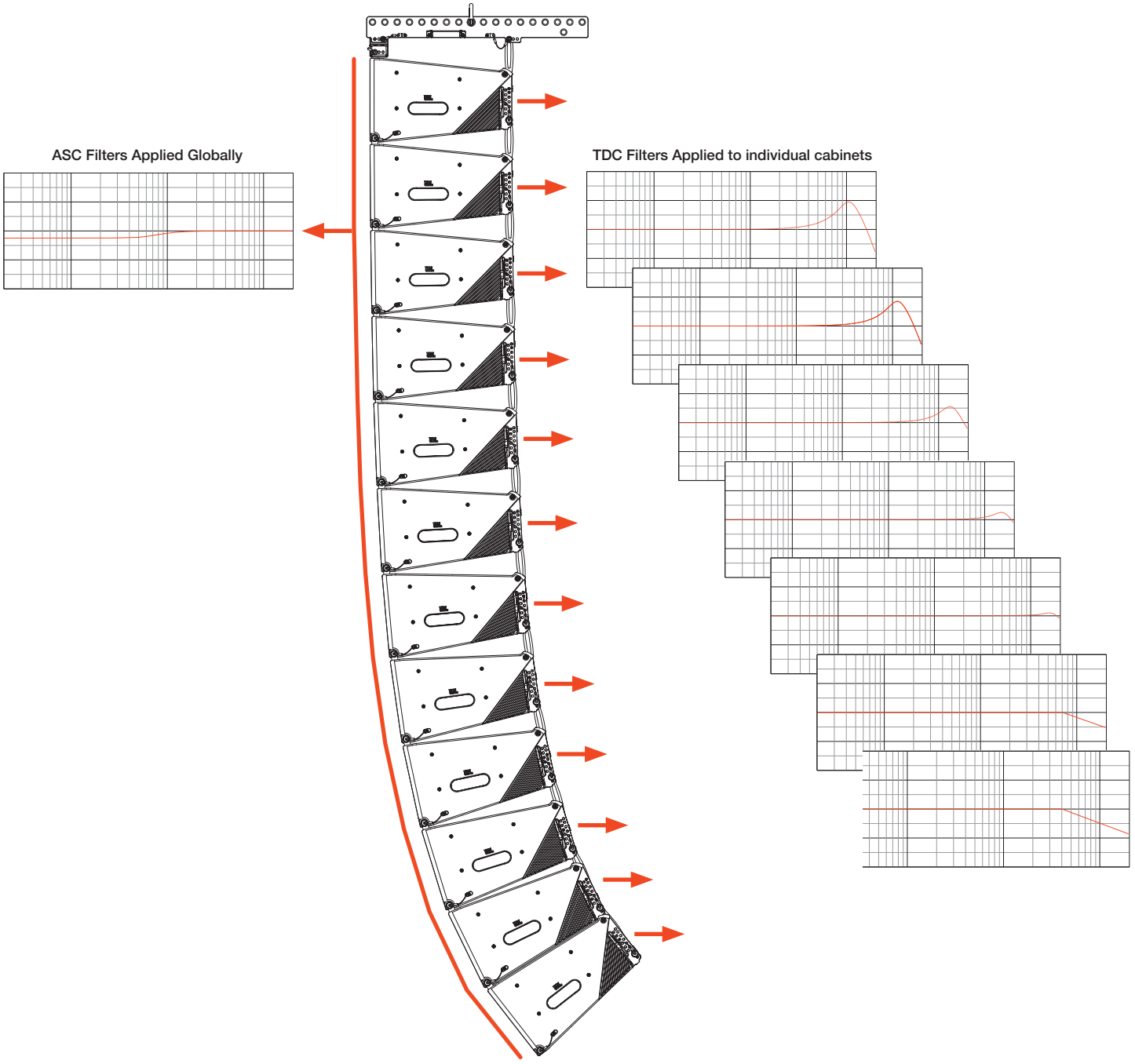

15 - SUBWOOFERS

15.1 CARDIOID SUBWOOFERS

In some situations, the omnidirectional nature of subwoofers is desirable, but in others, directional coverage is required. The most common use case for directional subwoofers involves preventing excessive low frequency energy from reaching the stage. A single subwoofer radiates omnidirectionally, but cardioid coverage can be achieved with an array of subwoofers in which the physical orientation of some cabinets is reversed and the Rear speaker mode selected. The Rear speaker mode sets the DSP parameters to optimize the system to provide the maximum amount of cancellation possible for most standard configurations without the need for any user DSP changes.

15.2 RECOMMENDED CARDIOID SETUPS

Cardioid configurations are typically differentiated by the ratio of front-facing to rear-facing cabinets, the spacing between stacks, and the position of rear-facing subwoofers within the stacks. Lower ratios produce higher rejection, higher ratios result in lower rejection. The SRX9xxS/SF factory presets were engineered to work with blocks having 2:1 and 3:1 ratios, with 2:1 delivering the greatest rear rejection. Subwoofer arrays designed around a 2:1 ratio can easily generate broadband rejection of 20 to 30 dB. It is NOT advised to go below 2:1 or above 3:1 ratios. If larger arrays are desired, combining cardioid blocks into bigger arrays is possible. Using Venue Synthesis to predict the expected coverage of complex arrays is suggested to ensure the intended coverage suits the desired application.

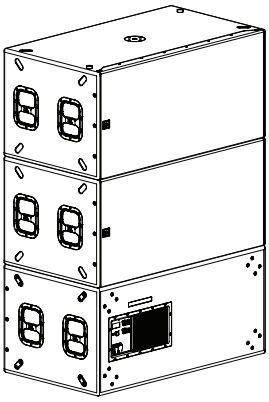

Example 1: 2:1 horizontal stack

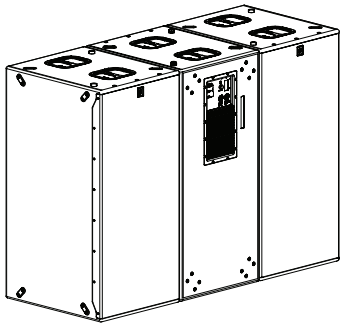

Example 2: 2:1 on-end

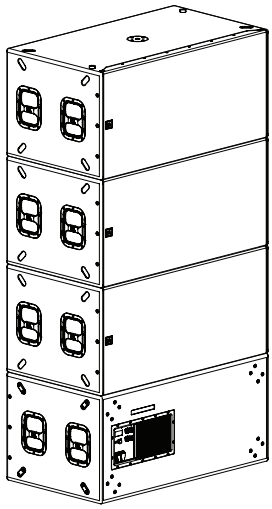

Example 3: 3:1 horizontal stack

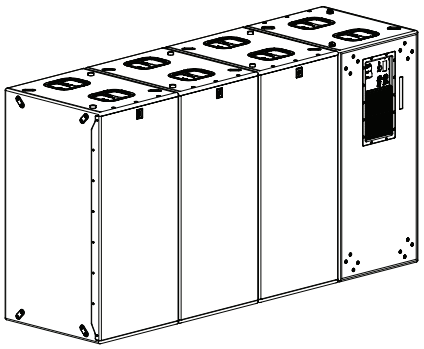

Example 4: 3:1 on-end

15.3 MINIMUM SPACE BETWEEN CARDIOID STACKS

When creating subwoofer arrays using cardioid blocks of subwoofers, a distance of at least 1 meter (3.2 feet) should be allowed between stacks and high-mass structures, like a concrete wall or stage, to avoid disrupting rear radiation patterns.

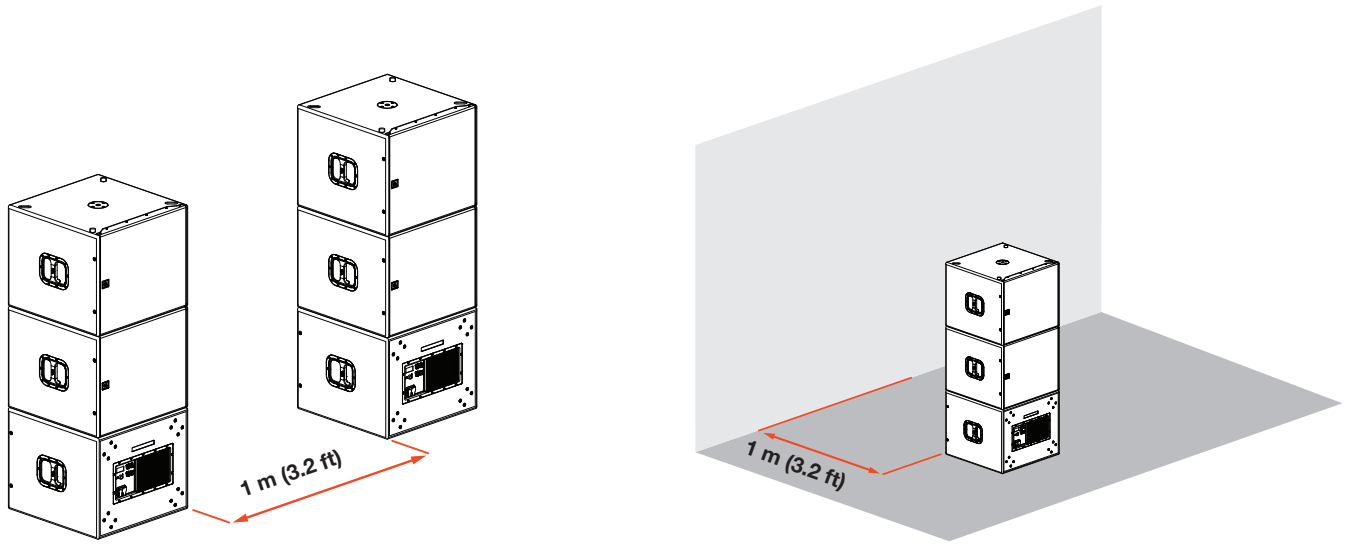

15.4 SUBWOOFER RATIOS FOR LINE-SOURCE MODELS

The minimum recommended subwoofer ratios provide sufficient headroom for both the subwoofers and full-range cabinets to reach their maximum SPL (limiter engagement) simultaneously, while maintaining a minimum 10 dB sub-to-full-range low-frequency contour. Other ratios may be used depending on the desired tonal balance, maximum SPL requirements, and application. In some cases, subwoofer selection may be influenced by additional factors such as stacking height and available inventory. Acoustically, all SRX900 line-source products are compatible with all SRX900 subwoofers.

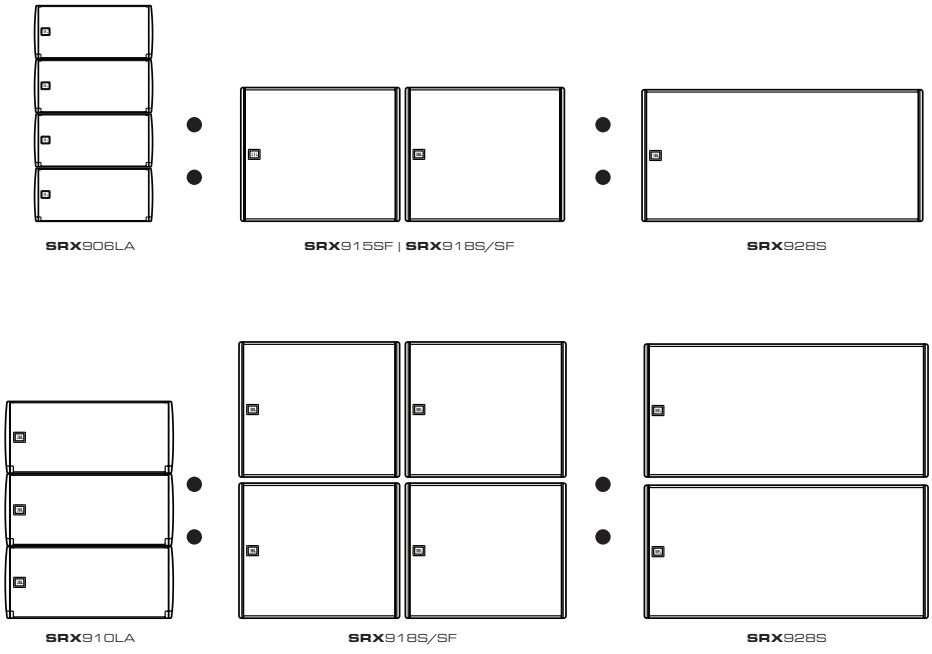

15.5 SUBWOOFER RATIOS FOR POINT-SOURCE MODELS

The minimum recommended subwoofer ratios provide sufficient headroom for both the subwoofers and full-range cabinets to reach their maximum SPL (limiter engagement) simultaneously, while maintaining a 3–6 dB sub-to-full-range low-frequency contour. Other ratios may be used depending on the desired tonal balance, maximum SPL requirements, and application. In some cases, subwoofer selection may be influenced by additional factors such as stacking height and available inventory. Acoustically, all SRX900 point-source products are compatible with all SRX900 subwoofers.

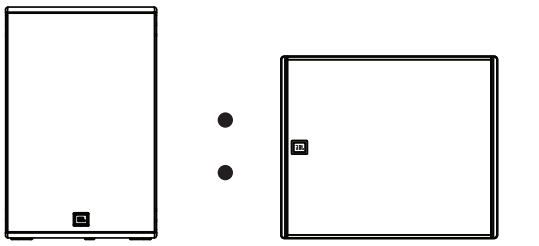

SRX912M **SRX**915SF | **SRX**918S/SF

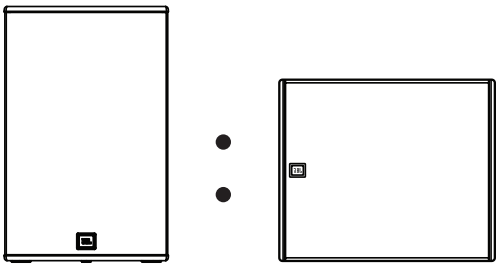

SRX915M **SRX**918S/SF

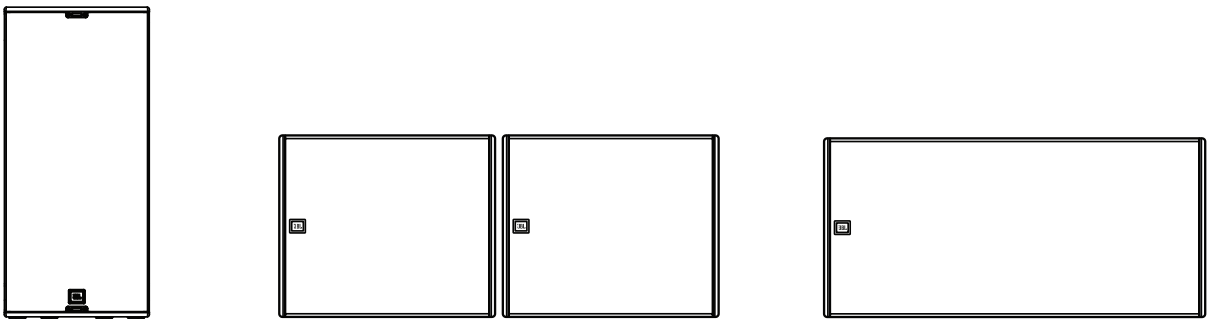

SRX922 **SRX**918S/SF **SRX**928S

16 - LCD

The LCD screen on the rear panel is a powerful tool for accessing speaker parameters, including operating modes (speaker presets) and network settings. Navigating the menus and changing selected parameters is done with the **Encoder**. Rotate the **Encoder** to move through menus and parameters. When the setting you want to edit is highlighted, press the **Encoder** to enable editing of the value, rotate the **Encoder** to set the desired value, then press the **Encoder** again to apply the value. Pressing the **Encoder** acts as an enter button. The **Back** button returns to the previous menu. In a confirmation dialog, the **Back** button acts to cancel the operation.

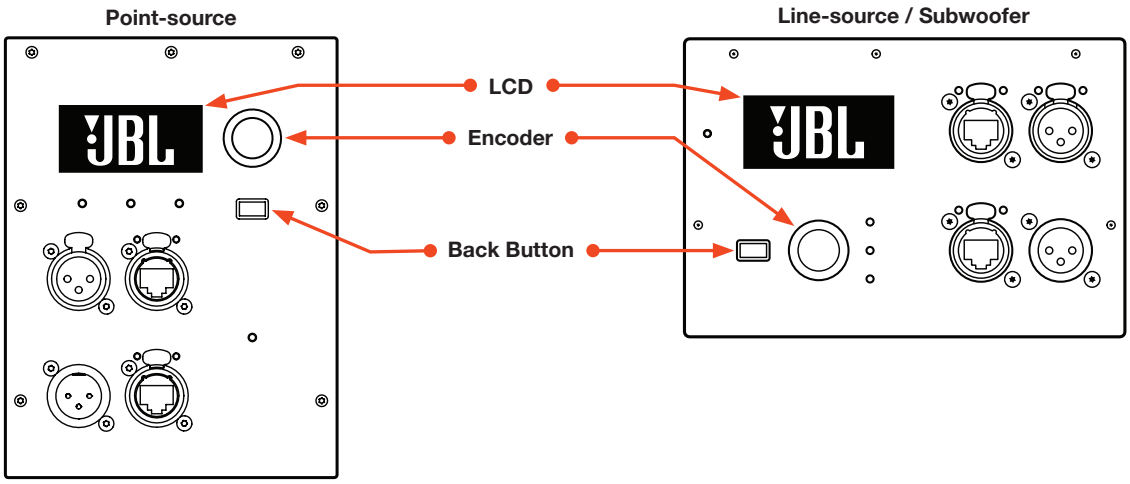

16.1 OVERVIEW SCREENS



The Home Screen

This screen is displayed after the amplifier completes its powerup routine, or after one minute of inactivity. It can also be accessed by pressing the **Back** button from the main menu.

1. HControl ID
2. Speaker Array/Location Information set from Performance software

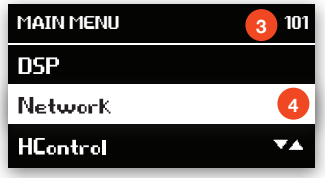

Main Menu

Pressing the encoder from the Home screen opens the main menu. The main menu provides access to all submenus.

3. HControl ID
4. Current menu position highlighted by the white bar

16.2 DSP



DSP Menu

The DSP menu contains high-level DSP parameters for user-adjustable DSP settings.



MUTE

To change the Mute setting, use the encoder to select the desired state. Press the encoder to apply the parameter, and the display will return to the DSP menu. Biamplified systems will have a mute per bandpass. Pressing the **Back** button exits the menu without applying a change.

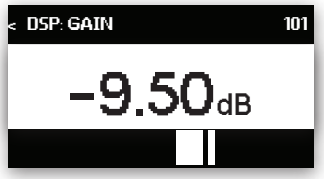

GAIN

The system input gain can be changed in real time by turning the encoder.
Pressing the **Back** button exits to the main menu.

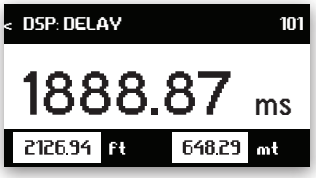

Delay

Delay can be enabled or disabled, and the delay time can be set from 0 ms to 2,000 ms.

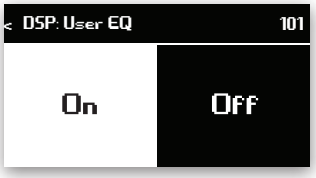

User EQ

User EQ is enabled or disabled with this control. User EQ can only be edited in the JBL Performance software.



Array Size Compensation and Throw Distance Compensation (Line Arrays Only)

Array Size Compensation (ASC) and Throw Distance Compensation (TDC) can be enabled or disabled and adjusted in .5 dB increments from -16 dB to +16 dB. These parameters will not be available for point source speaker models.

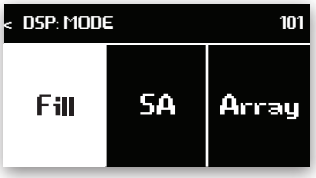

Speaker Mode (Full-range systems only)

For full-range systems, the speaker mode can be set by turning the encoder, then pressing on it to apply the selected setting. This change will load a speaker preset in the speaker DSP, optimized for the indicated use case, and has no effect on User DSP settings. More information on the available speaker modes can be found in **Section 13 - Speaker Presets**.



Orientation (Subwoofers only)

For subwoofers deployed on the ground, the speaker's orientation can be set to Forward or Rear. Selecting Rear loads a speaker preset with factory-optimized DSP settings for rear-facing subwoofers in a cardioid array.



LF Mode

LF Mode sets the crossover frequency used in the factory presets.

- For full-range systems, the setting options are Full-Range (FR) and 80 Hz
- For subwoofers, the setting options are 60 Hz and 80 Hz.



Reset All DSP

The User DSP section can be returned to factory default values by entering this screen, selecting the OK button with the encoder, and pressing it. On the confirmation screen, select Confirm, then press the knob a second time to reset the DSP parameters. This operation cannot be undone and will disconnect the device from connected software. Pressing the **Back** button at any time exits to the menu without making a change.

16.3 NETWORK



Mode

Press the Encoder to set the Network Mode to DHCP or Static.

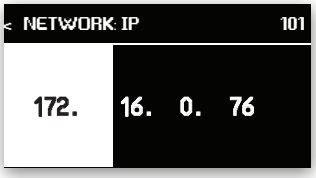

IP Address

When the network mode is set to Static, the IP can be set one octet at a time by using the encoder to select the desired octet, pressing the knob to enable editing, rotating the knob to select the desired value, and pressing the knob to store the change. Pressing the **Back** button cancels the change.

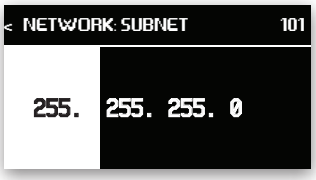

Subnet Mask

When the network mode is set to Static, the subnet can be set one octet at a time by using the encoder to select the desired octet, pressing the knob to enable editing, rotating the knob to select the desired value, and pressing the knob to store the change. Pressing the **Back** button cancels the change.

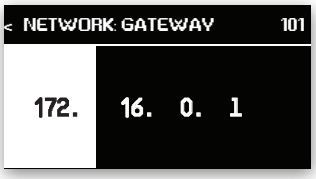

Gateway

When the network mode is set to Static, the gateway can be set one octet at a time by using the encoder to select the desired octet, pressing the knob to enable editing, rotating the knob to select the desired value, and pressing the knob to store the change. Pressing the **Back** button cancels the change.



MAC Address

This displays the device's MAC address. This address is unique to each product and set at the JBL factory at the time of manufacturing. This address is not user adjustable.

16.4 HCONTROL

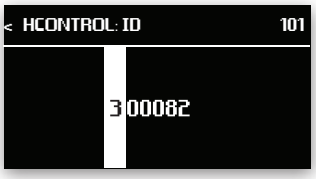

HControl ID (HCID)

If the HControl Lock is set to Unlocked, The HControl ID can be set one digit at a time by using the encoder to select the desired digit. To change the number, press the knob, rotate the knob to select the desired value, and press the knob to store the change. Pressing the **Back** button cancels the change to the digit.



Lock ID

The HControl ID lock disables the ability to change the HControl ID. Select the Lock or Unlock setting and press the encoder to confirm the setting. Pressing the **Back** button exits without making a change.



HControl Label

This read-only screen displays the HControl label set in the Performance software's NetSetter window as the identifier of the device.

16.5 SETTINGS



Auto Standby

The amplifier can be set to automatically conserve power when the audio drops below a specified level for a specified amount of time. The Auto Standby feature can be enabled or disabled by using the encoder to select On or Off, then pressing the knob to commit the change. The threshold level can be set using JBL Performance in the Device Control Panel.



Display Brightness

The display brightness can be changed in real time by turning the encoder. Pressing the **Back** button exits to the main menu.



Display Auto-Dim

The display can be set to automatically turn off when unused for a specified amount of time. This feature can be enabled or disabled on the LCD by turning the encoder to select the desired setting and then pressing it to apply the setting. The threshold time for auto-dimming can be set using JBL Performance in the Device Control Panel or by setting Display Auto-Dim Time on the LCD.



Display Auto-Dim Time

If Display Auto-Dim is enabled, this sets the amount of time between the last press of a knob or button on the LCD and when the display turns off. The Auto-Dim Time can be changed in real time by turning the encoder. Pressing the **Back** button exits to the main menu.



Ambient Temperature

The Ambient Temperature setting adjusts the equation used to calculate the amount of time applied when delay is entered as distance to account for the impact of temperature on the speed of sound, and can be changed in real time by turning the encoder. Pressing the **Back** button exits to the main menu.

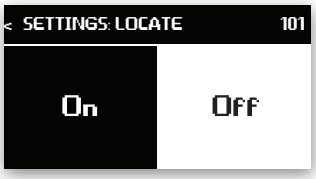

Locate

The Locate feature flashes the LEDs on the amplifier module and is bidirectionally used, either to identify hardware from software, or to identify an associated virtual device in software from the physical cabinet. This feature can be set from the LCD or from software. Restarting the device automatically sets this parameter to OFF. The feature can be enabled or disabled by using the encoder to select On or Off, and then pressing on it to apply the value.

16.6 INFO



Speaker Model

This screen displays the speaker model.



Amplifier Version

This screen displays the hardware revision of the amplifier module.



Firmware Version

This screen displays the loaded firmware version.

16.7 SYSTEM RESET

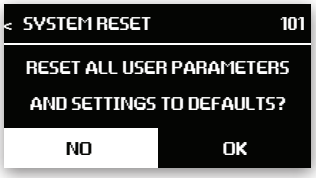

System Reset

This feature resets all user settings and DSP back to factory defaults. It erases all parameter settings, network information, stored presets, and all other user-adjustable settings. This action cannot be undone. Selecting the **OK** button with the **Encoder** and pressing it will bring the confirmation screen. Selecting Confirm on the confirmation screen and pressing on the knob a second time resets the device back to defaults. Pressing the **Back** button exits to the menu without making a change.

16.8 MENU OVERVIEW

The graphic below represents all options and settings available from the rear LCD screen on the SRX900 Series products.

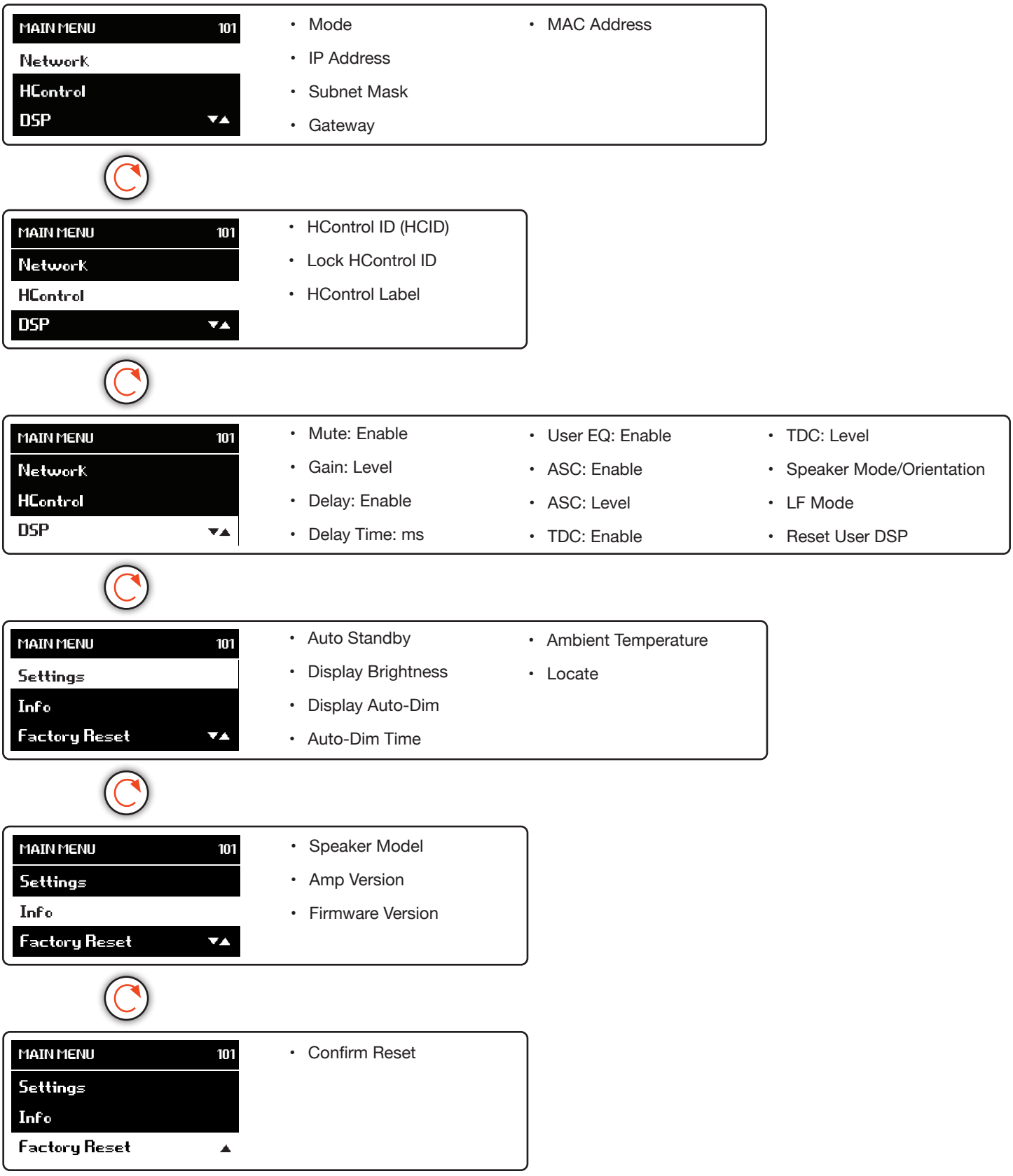

16.9 REVERT FIRMWARE

SRX900 products contain two versions of firmware within the devices memory: the current firmware the device uses to operate, and the previous version of firmware. In the event it is necessary to revert an SRX900 product to the previous version of firmware, follow the steps below.

STEPS:

1. Disconnect power to the product
2. Hold down the **Back** and **Encoder** buttons simultaneously
3. Power on the product
4. Continue to hold down both buttons until LCD displays “Reverting Firmware”
5. Release the buttons and allow device to boot up

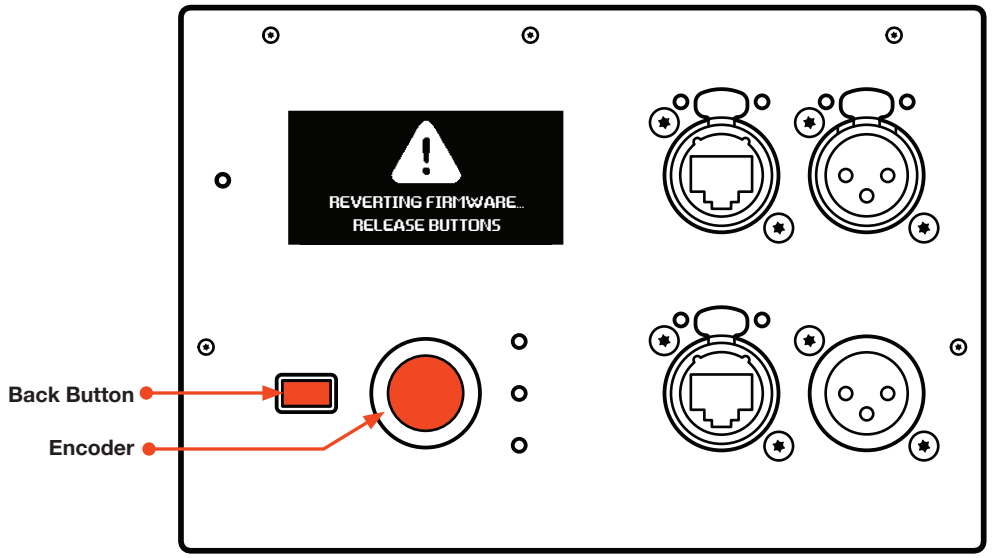

17 - RAIN COVER

The SRX900 RC1 and RC2 Rain Covers are rugged weather-resistant protective covers that easily install over top any SRX900 Series amplifier module to protect the amplifier LCD screen and connections from moisture. The Rain Covers have Velcro strips sewn to the edges to allow the user to close the cover over top of the connections once system setup is complete.

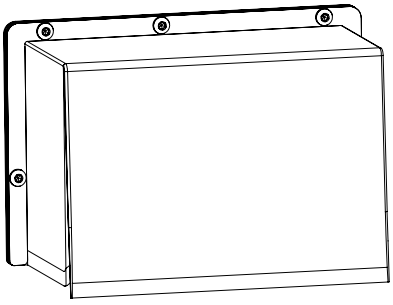

SRX900 RC1

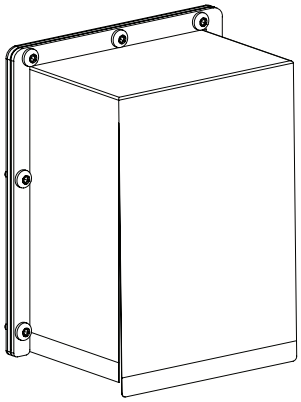

SRX900 RC2

COMPATIBILITY	
RSX900 RC1 :	SRX906LA | SRX910LA | SRX915SF | SRX918S | SRX918SF | SRX928S
RSX900 RC2 :	SRX912M | SRX915M | SRX922

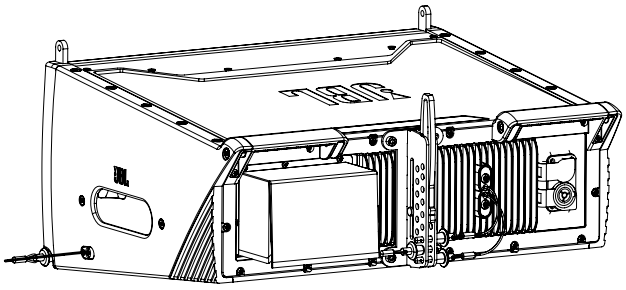

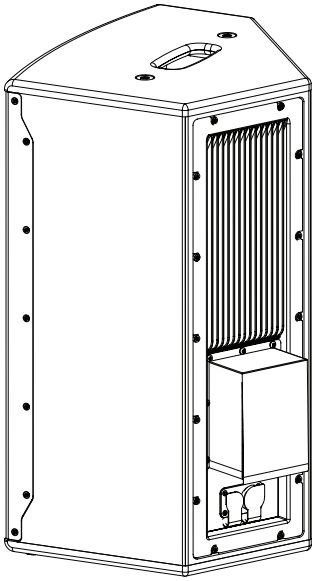

17.1 INSTALLING THE SRX900 RC RAIN COVER

To Install the Rain Cover, line the holes in the Rain Cover frame up to the threaded mounting points on the amplifier module and install the five screws included with the Rain Cover kit. The cover is depicted on an SRX918S below, but is a universal part that can fit on any of the SRX900 Series products.

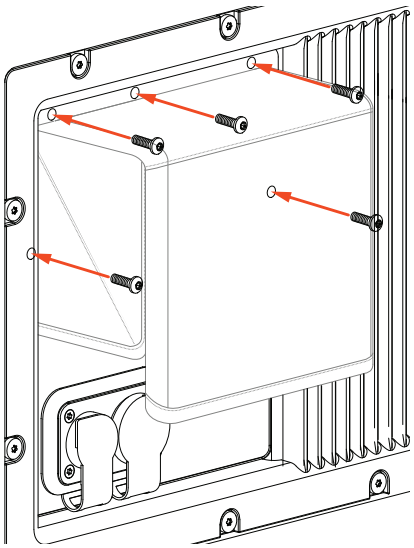

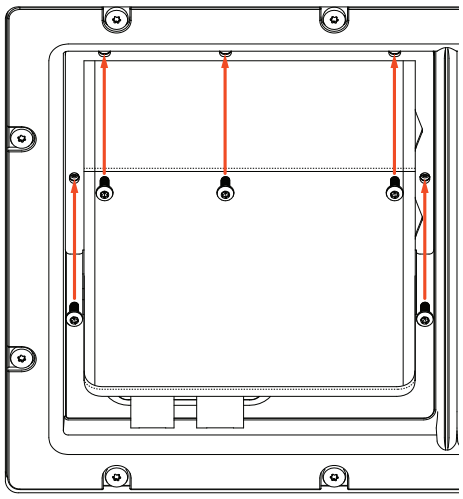

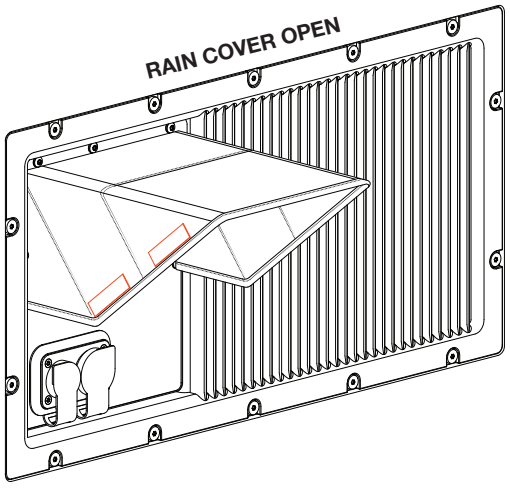

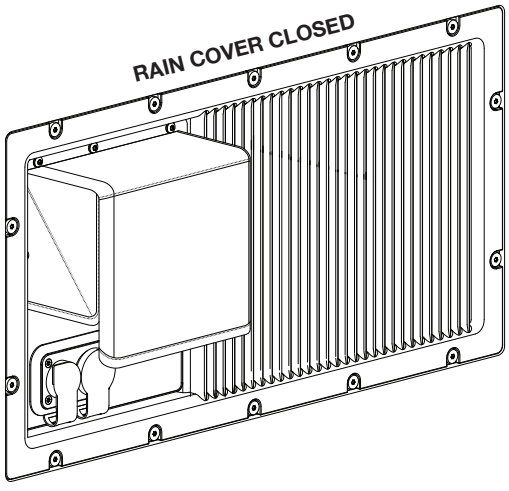

TOOLS REQUIRED: Use a Torx® T15 driver for RC1 or a Torx® T20 driver for RC2 when installing the rain cover.

18 - CONTACT INFORMATION

UNITED STATES OF AMERICA

HARMAN Professional Solutions
8500 Balboa Blvd.
Northridge, CA 91329
USA
+1 (844) 776-4899
www.jblpro.com

U.S.A. Technical Support
+1 (844) 776-4899
HProTechSupportUSA@Harman.com
www.jblpro.com

PROFESSIONAL CONTACTS, OUTSIDE THE U.S.A.:

Contact the JBL Professional distributor in your area. A complete list of JBL Professional international distributors is provided at our U.S.A. website: www.jblpro.com

HARMAN Professional EMEA
Westside
London Road
Hemel Hempstead
HP3 9TD
United Kingdom
www.pro.harman.com
www.jblpro.com/support

HARMAN Professional APAC
108 Pasir Panjang Road
#02-08 Golden Agri Plaza
Singapore 118535
+65 6870-5000
www.pro.harman.com
www.jblpro.com/support

HARMAN Professional China
20F, China Merchants Port Plaza, #1
Gongye 3rd Road, Shekou, Nanshan Dist.
Shenzhen, 518067, China
400 166 7806
www.harman.com/China
www.jblpro.com/support

China In-Country Support
ChinaPRO.Service@harman.com

HARMAN Professional India
Prestige Technology Park
Jupiter 2A Block, 4th Floor
Marathahalli Ring Road
Bangalore 560103, India
+1 (800) 208-8880
www.harman.com/India
www.jblpro.com/support

India In-Country Support
www.harman.com/india/india-service-center

HARMAN Professional Brazil
Br386, Km435 92480-000
Nova Santa Rita Rs
Brazil
+55 51 34794000
www.harman.com/Brasil
www.jblaudio.com.br
www.jblpro.com/support

Brazil In-Country Support
tecnica@harman.com


JBL
PROFESSIONAL