SLR 4M4M3

Data Sheet



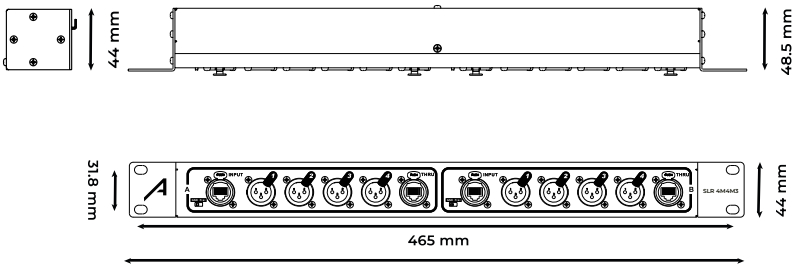

GENERAL INFORMATION

Model	SLR 4M4M3
ID	10330593
Brand	Audibax
EAN	8436850181910
Colour	Black
Intrastat	85369010
Category	Stage Boxes

CONTROL AND OPERATION

Type of Control	Passive
Protocols Supported	DMX-512, Analog Audio, AES/EBU
Channels and Virtual Channels	8 channels
Manual Control Options	Ground/Lift switch

PHYSICAL AND INSTALLATION DETAILS

Mounting & Installation Options	1U 19\" Rack mounting (Rack box)
Housing & Build Quality	Heavy-duty metal chassis with metal flanges. Professional stage build.

SOLUTIONS

Solutions	Passive DMX/Audio Splitter

CONNECTIVITY AND INTERFACES

Connector Type 1	2xRJ45 / EtherCON (INPUT-OUTPUT)
Connector Type 2	8 x 3-pin XLR (Male)
Inputs Line	2 x etherCON
Outputs Line	8
Shield	Requires shielded SFTP CAT5/CAT6/CAT7 connection cable to ensure shared earthing common ground

PHYSICAL

Weight Single (Kg)	0.85
Dimensions (L x W x H)	4.5 x 48.3 x 5.5 cm

SHIPPING

Weight (Kg)	0.92
Dimensions (L x W x H)	7 x 50 x 6 cm

Master carton

Weight (Kg)	18.6
Dimensions (L x W x H)	33 x 30.5 x 53 cm
Units per master carton	20

WHAT IS IN THE BOX

1x SLR 4M4M3
1x Manual

CERTIFICATIONS / APPROVALS

Certifications	CE, ROHS

Channel A

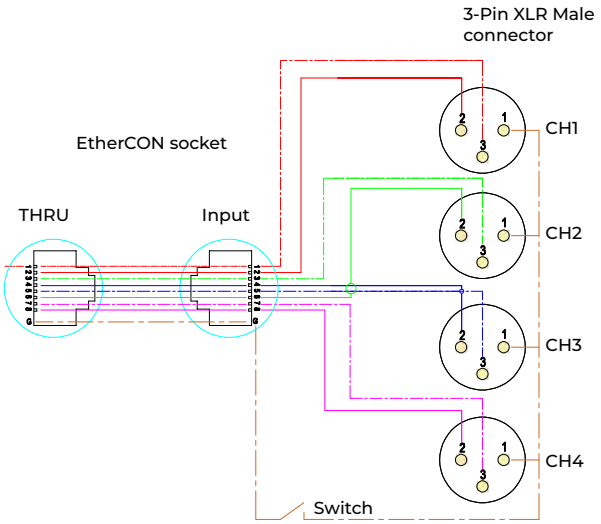

Channel B

