10.Maintenance and cleaning

It is absolutely essential that the fixture is kept clean and that dust, dirt and smoke-fluid residues must not build up on or within the fixture. Otherwise, the fixture's light-output will be significantly reduced. Regular cleaning will not only ensure the maximum light-output, but will also allow the fixture to function reliably throughout its life.A soft lint-free cloth moistened with any good glass cleaning fluid is recommended, under no circumstances should alcohol or solvents be used!

DANGER !
Disconnect from the mains before starting any maintenance work

The front objective lens will require weekly cleaning as smoke-fluid tends to building up residues, reducing the light-output very quickly. The cooling-fans should be cleaned monthly.

The interior of the fixture should be cleaned at least annually using a vacuum-cleaner or an air-jet. Dichroic colour filters, CMY lamellas, gobo and graphic wheels and the internal lenses should be cleaned monthly. Remove dust and dirt from the fans and cooling vents using a soft brush and vacuum-cleaner.

Important! Check the air filters periodically and clean before they become clogged!

Clean two air filters placed in the fixture's covers and two in the fixture base. Use a vacuum cleaner, compressed air or you can wash them and put back dry.

After replacing the air filters, reset the elapsed time counter in the menu "Information" (Information--->Air Filters--->Elapsed Time).

Replacing the fuse. Before replacing the fuse, unplug mains lead.

1) Remove the fuse holder on the rear panel of the base with a fitting screwdriver from the housing (anti-clockwise).
2) Remove the old fuse from the fuse holder.
3) Install the new fuse in the fuse holder (only the same type and rating).
4) Replace the fuseholder in the housing and fix it.

FOS technologies

FOS Triton

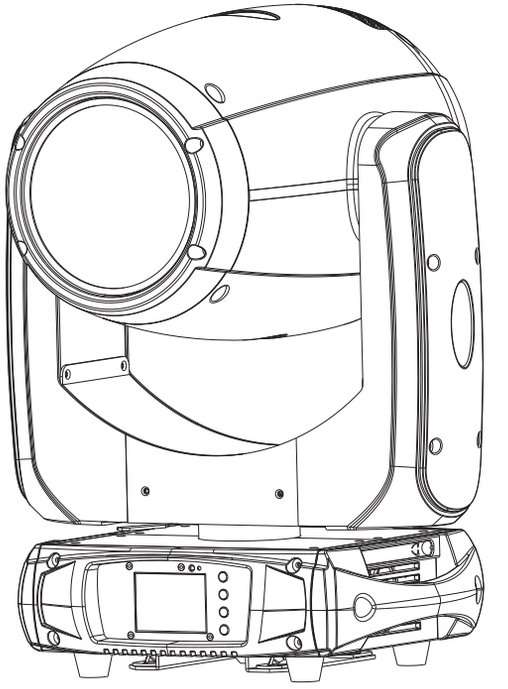

Version 1.0

USER MANUAL

- Be sure to read the USER MANUAL carefully before using this product.
- Be sure to keep the USER MANUAL properly for future needs.
- Use this product correctly when you can fully understand the User Manual

1.Safety instructions

Thank you for choosing our FOS Triton. FOR YOUR OWN SAFETY, PLEASE READ THIS USER MANUAL CAREFULLY

BEFORE YOU INITIAL START - UP!

CAUTION!
Be careful with your operations.
With a high voltage you can suffera dangerous electric shock when touching the wires!

This device has left our premises in absolutely perfect condition. In order to maintain this condition and to ensure a safe operation, it is absolutely necessary for the user to follow the safety instructions and warning notes written in this manual.

CAUTION!
Keep this device away from rain and moisture!
Unplug mains lead before opening the housing!

Important:

The manufacturer will not accept liability for any resulting damages caused by the non-observance of this manual or any unauthorized modification to the device.

Please consider that damages caused by manual modifications to the device are not subject to warranty.

During the operation the housing becomes hot). Allow the fixture to cool approximately 20 minutes prior to manipulate with it.

Make sure that the available voltage is not higher than stated on the rear panel.

WARNING! This unit does not contain an ON/OFF switch. Always disconnect power input cable to completely remove power from unit when not in use or before cleaning or servicing the fixture.

Make sure that the power-cord is never crimped or damaged by sharp edges. Check the device and the power-cord from time to time.

Always disconnect from the mains, when the device is not in use or before cleaning it. Only handle the power-cord by the plug. Never pull out the plug by tugging the power cord.

This device falls under protection class I. Therefore it is essential to connect the yellow/green conductor to earth.

The electric connection, repairs and servicing must be carried out by a qualified employee.

Do not connect this device to a dimmer pack.

Do not switch the fixture on and off in short intervals as this would reduce the lamp's life.

During the initial start-up some smoke or smell may arise. This is a normal process and does not necessarily mean that the device is defective.

Do not touch the device's housing bare hands during its operation (housing becomes hot)!

For replacement use lamps and fuses of same type and rating only.

CAUTION ! EYE DAMAGES !
Avoid looking directly into the light source
(meant especially for epileptics) !

11	9		**Cyan**
		0..255	Cyan 0%...100%
12	10		**Magenta**
		0..255	Magenta 0%...100%
13	11		**Yellow**
		0..255	Yellow 0%...100%
14	12		**CTO**
		0..255	Configure To Order 0%...100%
15	13		**Focus**
		0..255	In(near) to out(far)
16	14		**Zoom**
		0..255	In(near) to out(far)
17	15		**Rrotating prism, Prism**
		0..5	OFF
		6..127	ON
		128..189	Forwards rotation from fast to slow
		190..193	Prism rotation stop
		194..255	Forwards rotation from fast to slow
18	16		**Frost**
		0..199	Frost OFF
		200..255	Frost ON
19	17		**Speed pan/tilt**
		0..225	max to min speed
		226..235	blackout by movement
		236..245	blackout by all wheel changing
		246..255	no function
20	18		**Special function**
		0..19	No function
		20..29	No function
		30..39	No function
		40..79	No function
		80..84	All Motor reset
		85..87	Scan motor reset
		88..90	Colors motor reset
		91..93	Gobo motor reset
		94..96	No function
		97..99	Other motor reset
		100..119	Internal program 1
		120..139	Internal program 2
		140..159	Internal program 3
		160..179	Internal program 4
		180..199	Internal program 5
		200..219	Internal program 6
		220..239	Internal program 7
		240..255	Internal program 8

6	4		**Gobo wheel 1**
		0..9	Open
		10..19	gobo 1
		20..29	gobo 2
		30..39	gobo 3
		40..49	gobo 4
		50..59	gobo 5
		60..69	gobo 6
		70..79	gobo 7
		80..99	Gobo 1 shake slow to fast
		100..119	Gobo 2 shake slow to fast
		120..139	Gobo 3 shake slow to fast
		140..159	Gobo 4 shake slow to fast
		160..179	Gobo 5 shake slow to fast
		180..199	Gobo 6 shake slow to fast
		200..219	Gobo 7 shake slow to fast
		220..255	Rot. gobo wheel cont. rotation slow to fast
7	5		**Gobo 1 rotation**
		0..127	Gobo indexing
		128..189	Forwards gobo rotation from fast to slow
		190..193	Gobo rotation stop
		194..255	Backwards gobo rotation from slow to fast
8	6		**Gobo wheel 2**
		0..9	Hole with spot
		10..19	Gobo 1
		20..29	Gobo 2
		30..39	Gobo 3
		40..49	Gobo 4
		50..59	Gobo 5
		60..69	Gobo 6
		70..89	Gobo 1 shake slow to fast
		90..99	Gobo 2 shake slow to fast
		110..129	Gobo 3 shake slow to fast
		130..149	Gobo 4 shake slow to fast
		150..169	Gobo 5 shake slow to fast
		170..189	Gobo 6 shake slow to fast
		190..255	Gobo wheel rotation from slow to fast
9	7		**Shutter**
		0..31	Shutter closed
		32..63	shutter open
		64..95	Strobe effect slow to fast
		96..127	shutter open
		128..159	Pulse-effect in sequences slow to fast
		160..191	shutter open
		192..223	Random strobe effect slow to fast
		224..255	shutter open
10	8		**Dimmer**
		0..255	Dimmer 0%...100%

2.UNPACKING

The FOS Triton adopts a 400W white LED lamp which features high brightness and stability. Please carefully unpack it when you receive the fixture and check whether it is damaged during the transportation. And please check whether the following items are included inside the box:

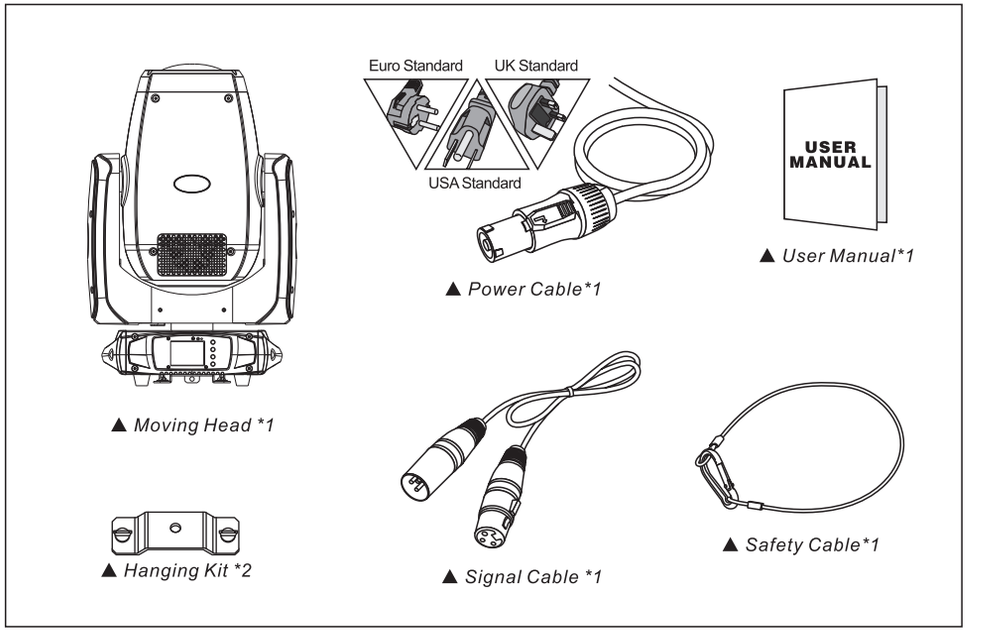

The FOS Triton is made of a new type of high temperature strength of engineering plastics and cast aluminum casing with nice outlook . The fixture is designed and manufactured strictly following CE standards, complying with international standard DMX512 protocol. It's available independently controlled and linkable with each other for operation. And it is applicable for large-scale live per formances, theater, studio, nightclubs and discos.

This manual covers the important information on installation and applications. Meanwhile, please keep this manual well for future needs.

3.TECHNICAL INFORMATION

SPECIFICATIONS:

- 1*400W white led lamp, 5800K, 50000 hours life span.
- Input Voltage:AC90-260V 50/60Hz
- Power Consumption: 500W
- Control Signal:DMX512 , master-slave and sound activated or auto operation (8 built-in programs)
- Control Channel: 20/18 DMX channels USITT DMX-512.
- Dimensions: 379(D)*255(W)*585(H)mm
- Packing Dimensions:435(D)*350(W)*685(H)mm
- Net Weight: 21.5kgs
- Gross Weight: 24kgs

FEATURES:

- Low power consumption
- Linear motorized zoom with 3.5°-36° beam/spot mode, 10-60° frost mode
- 2.5m-15m electric focus
- Linear CMY+CTO
- 8-Facet prism and frost filter
- 0-100% Linear LED dimmer
- Aperture effect: 5% -100% smooth adjustment of the focal length.
- DMX512, master-slave and sound activated or auto operation
- 25T/sec high speed LED shutter/strobe effect with variable speed
- Preset variable/random strobe and dimming pulse effect
- 2.4" TFT LCD display (320*240pix)
- Powercon IN/OUT
- 3-Pin XLR connectors IN/OUT
- IP20 protection rating
- 55dB at 3'dB rating
- 2*1/4 turn fastening Omega clamps
- Safety attachment point

MOVEMENT:

- 8/16 bit smooth and precise resolution for PAN/TILT movement
- 540°/630°/360°/ PAN and 270°/180°/90° TILT movement

COLORS:

- 1 Color wheel with 10 colors plus open

GOBOS:

- 1 Static gobo wheel with 6 gobos plus open
- 1 Rotatable gobo wheel with 7 rotatable and interchangeable glass gobos plus open with speed adjustable, stream effect, dithering effect and rotatable clockwise or anticlockwise

FUNCTION:

- Improved optics and flat beam field
  Variable direction rainbow effect with speed adjustable
- Fan cooling system
  Constant temperature readout and management function
- -35°C ~ 45°C max ambient temperature

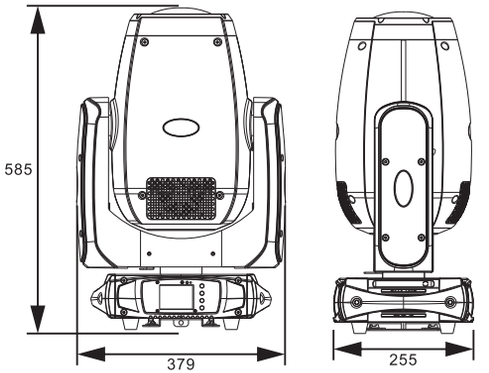

Gobo Wheel&Color Wheel:

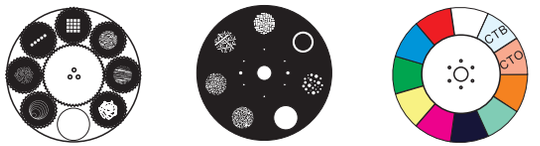

CMY+CTO Wheel



9.DMX PROTOCOL

Mode/Channel		Value	Function
20CH	18CH		
1	1		**Pan**
		0..255	PAN Movement
2			**Pan-fine**
		0..255	Fine control of Pan movement
3	2		**Tilt**
		0..255	Tilt Movement
4			**Tile-fine**
		0..255	Fine control of Tilt movement
5	3		**Color wheel**
		0..9	Open / white
		10..19	Color 1
		20..29	Color 2
		30..39	Color 3
		40..49	Color 4
		50..59	Color 5
		60..69	Color 6
		70..79	Color 7
		80..89	Color 8
		90..99	Color 9
		100..127	Color 10
		128..189	Forwards rainbow effect from fast to slow
		190-193	Color rotation stop
		194..255	Backwards rainbow effect from slow to fast
5	3		**Color wheel (Mode 2)**
		0..4	Open / white
		5..9	White + Color 1
		10..14	Color 1
		15..19	Color 1 + Color 2
		20..24	Color 2
		25..29	Color 2 + Color 3
		30..34	Color 3
		35..39	Color 3 + Color 4
		40..44	Color 4
		45..49	Color 4 + Color 5
		50..54	Color 5
		55..59	Color 5 + Color 6
		60..64	Color 6
		65..69	Color 6 + Color 7
		70..74	Color 7
		75..79	Color 7 + Color 8
		80..84	Color 8
		85..89	Color 8 + Color 9
		90..94	Color 9
		95..99	Color 9 + Color 10
		100..104	Color 10
		105..127	Color 10 + White
		128..189	Forwards rainbow effect from fast to slow
		190-193	Color rotation stop
		194..255	Backwards rainbow effect from slow to fast

8.MENU OPERATIONS

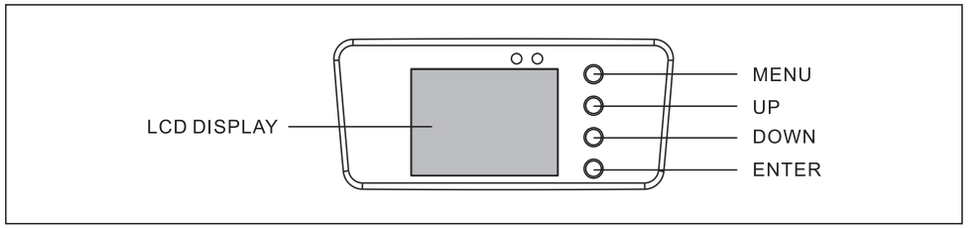

MENU			Description
Function Mode	Dmx Address	A001~AXXX	***DMX address setting***
	Channel Mode	CH20	***Standard mode***
		CH18	***Vector mode***
	Auto Run	Internal Program1~9	***Internal Program***
		State: Master/Alone	***Auto Run State***
		Auto Run (On/Off)	***Open Auto Run***
	Music Control	Internal Program1~9	***Internal Program***
		State: Master/Alone	***Sound Control State***
		Music Run (On/Off)	***Open Sound Control***
Option	Reset Default	Yes/No	***Reset Default***
	Signal Set	Wire DMX	***Wire DMX***
		Wireless DMX	***Wireless DMX***
		Act WDMX&Out	***Act WDMX&Out***
	Pan / Tilt	Reverse Pan (On/Off)	***Reverse Pan***
		Reverse Tilt (On/Off)	***Reverse Tilt***
		Select Pan 630°/540°/360°	***Pan Degree,default is 540°***
		Select Tilt 270°/180°/90°	***Tilt Degree,default is 270°***
	UI SET	Mic sensitivity 0~99%	***MIC Sensitivity Setting***
		OFF Signal Mode (On/Off)	***OFF at original status and ON at reset status when no DMX signal***
		Half Color Wheel(On/Off)	***Open half color function (Default: off)***
Information	Temperature	XXX°C/°F	***Current Temperature***
	Software Version	V1.0~V9.9	***Software Version***
Manual Control	Reset	Total Reset	***Total Reset***
		Pan/Tilt Reset	***Pan/Tilt Reset***
		Color Reset	***Color Reset***
		Gobo Reset	***Gobo Reset***
		The Others Reset	***The Others Reset***
	Channel	PAN=XXX.....	***Channel Control***
Advanced (Access Code 088)	Calibration	PAN=XXX.....	***Calibration***
	UID Code		

4.PHOTOMETRICS DIAGRAM

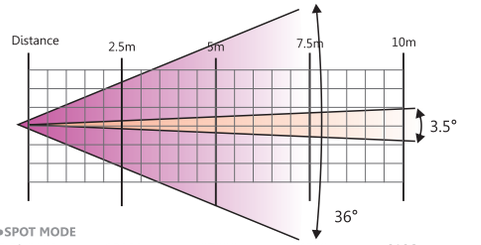

●SPOT MODE

3.5° (LUX)	93080	37330	14500	9106
Diameter(m)	ø 0.35	ø 0.59	ø 0.94	ø 1.21
36° (LUX)	3806	2016		
Diameter(m)	ø 1.67	ø 3.22		

●BEAM MODE

3.5° (LUX)	189440	74820	32800	18604
Diameter(m)	ø 0.28	ø 0.40	ø 0.63	ø 0.82
36° (LUX)	6141	24606		
Diameter(m)	ø 1.67	ø 3.22		

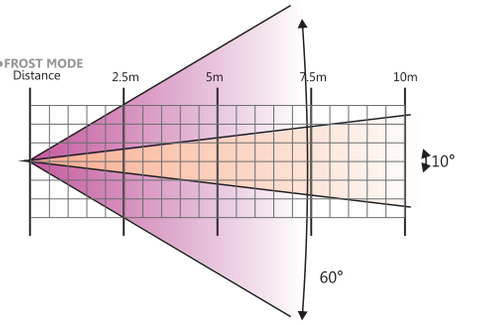

10° (LUX)	43270	12849	5227	2627	
Diameter(m)	ø 0.55	ø 0.98	ø 1.38		
60° (LUX)	2300	1480	716		
Diameter(m)	ø 2.16				

5.OPERATION INSTRUCTIONS

- The FOS Triton is for beam spot wash effect for on-site decoration purpose.
- Don't turn on the fixture if it's been through severe temperature difference like after transportation because it might damage the light due to the environment changes. So make sure to operate the fixture until it is in normal temperature.
- This light should be keep away from strong shaking during any transportation or movement.
- Don't pull up the light by only the head, or it might cause damages to the mechanical parts.
- Don't expose the fixture in overheat, moisture or environment with too much dust when installing it. And
- don't lay any power cables on the floor. Or it might cause electronic shock to the people.
- Make sure the installation place is in good safety condition before installing the fixture.
- Make sure to put the safety chain and check whether the screws are screwed properly when installing the fixture.
- Make sure the lens are in good condition.It's recommended to replace the units if there are any damages or severe scratch.
- Make sure the fixture is operated by qualified personnel who knows the fixture before using.
- Keep the original packages if any second shipment is needed.
- Don't try to change the fixtures without any instruction by the manufacturer or the appointed repairing agencies.
- It is not in warranty range if there are any malfunctions from not following the user manual to operate or any illegal operation, like shock short circuit, electronic shock , lamp broke, etc.

6.INSTALLATIONS

Cautions:

For added protection mount the fixtures in areas outside walking paths, seating areas, or in areas were the fixture might be reached by unauthorized personnel.
Before mounting the fixture to any surface, make sure that the installation area can hold a minimum point load of 10 times the device's weight.
Fixture installation must always be secured with a secondary safety attachment, such as an appropriate safety cable.
Never stand directly below the device when mounting, removing, or servicing the fixture.
from a ceiling, or set on a flat level surface (see illustration below). Be sure this fixture is kept at least 0.5m (1.5 f t) away from any flammable materials (decoration etc.).
Always use and install the supplied safety cable as a safety measure to prevent accidental damage and/or injury in the event the clamp fails.

Mounting points:

Overhead mounting requires extensive experience, including amongst others calculating working load limits, a fine knowledge of the installation material being used, and periodic safety inspection of all installation material and the fixture. If you lack these qualifications, do not attempt the installation yourself. Improper installation can result in bodily injury.
Be sure to complete all rigging and installation procedures before connecting the main power cord to the appropriate wall outlet.

Clamp Mounting:

FOS Triton provides a unique mounting bracket assembly that integrates the bottom of the base, and the safety cable rigging point in one unit (see the illustration below). When mounting this fixture to truss be sure to secure an appropriately rated clamp to the included omega bracket using a M10 screw fitted through the center hole of the "Hanging Kit". As an added safety measure be sure to attached at least one properly rated safety cable to the fixture using on of the safety cable rigging point integrated in the base assembly .

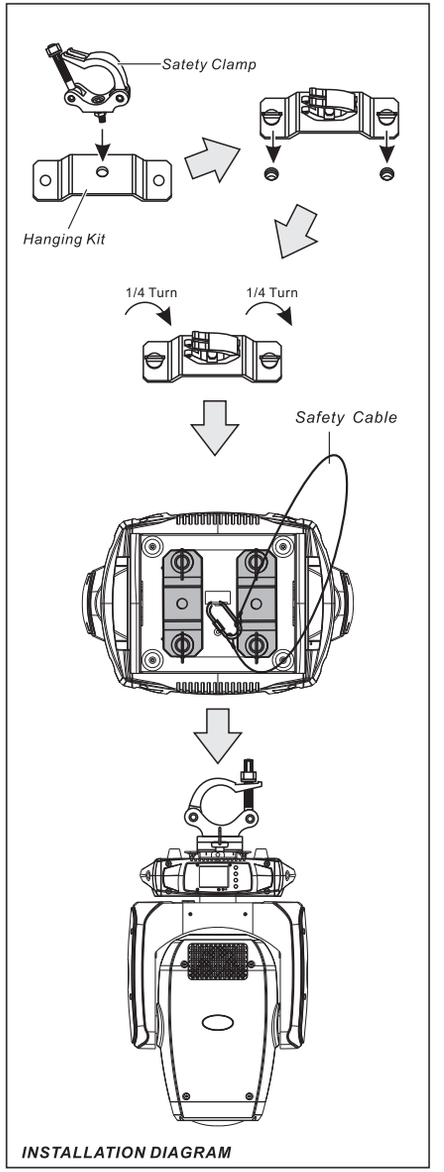

INSTALLATION DIAGRAM

7.CONTROL CONNECTION

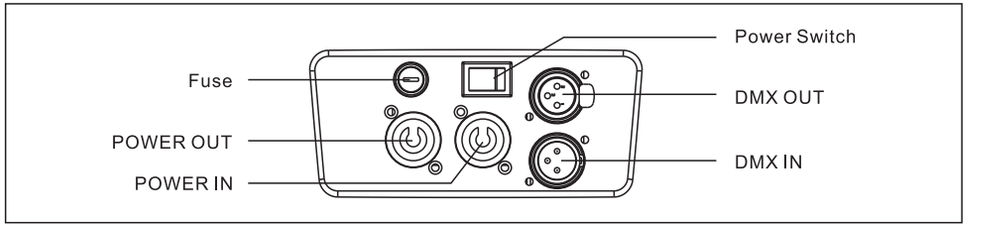

Connect the provided XLR cable to the female 3-pin XLR output of your controller and the other side to the male 3-pin XLR input of the moving head. You can chain multiple Moving head together through serial linking. The cable needed should be two core, screened cable with XLR input and output connectors. Please refer to the diagram below. DMX-512 connection with DMX terminator.

For installations where the DMX cable has to run a long distance or is in an electrically noisy environment, such as in a discotheque, it is recommended to use a DMX terminator. This helps in preventing corruption of the digital control signal by electrical noise. The DMX terminator is simply an XLR plug with a3 resistor connected between pins 2 and 3,which is then plugged into the output XLR socket of the last fixture in the chain. Please see illustrations below.

