CR3.5 • CR4.5

CREATIVE REFERENCE POWERED STUDIO MONITORS

OWNER'S MANUAL



www.mackie.com

MACKIE.

Important Safety Instructions

1. Read these instructions.
2. Keep these instructions.
3. Heed all warnings.
4. Follow all instructions.
5. Do not use this apparatus near water.
6. Clean only with a dry cloth.
7. Do not block any ventilation openings. Install in accordance with the manufacturer's instructions.
8. Minimum distance (5 cm) around the apparatus for sufficient ventilation. The ventilation should not be impeded by covering the ventilation openings with items, such as newspapers, table-cloths, curtains, etc.
9. Do not install near any heat sources such as radiators, heat registers, stoves, or other apparatus (including amplifiers) that produce heat.
10. No naked flame sources, such as lighted candles, should be placed on the apparatus.
11. Protect the power cord from being walked on or pinched particularly at plugs, convenience receptacles, and the point where they exit from the apparatus.
12. Only use attachments/accessories specified by the manufacturer.
13. Use only with a cart, stand, tripod, bracket, or table specified by the manufacturer, or sold with the apparatus. When a cart is used, use caution when moving the cart/apparatus combination to avoid injury from tip-over.



14. Unplug this apparatus during lightning storms or when unused for long periods of time.
15. Refer all servicing to qualified service personnel. Servicing is required when the apparatus has been damaged in any way, such as power-supply cord or plug is damaged, liquid has been spilled or objects have fallen into the apparatus, the apparatus has been exposed to rain or moisture, does not operate normally, or has been dropped.
16. This apparatus shall not be exposed to dripping or splashing, and no object filled with liquids, such as vases or beer glasses, shall be placed on the apparatus.
17. Do not overload wall outlets and extension cords as this can result in a risk of fire or electric shock.

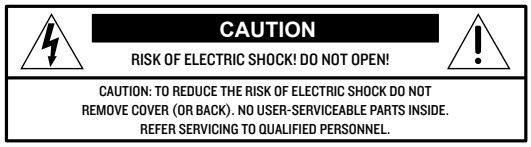



The lightning flash with arrowhead symbol within an equilateral triangle is intended to alert the user to the prescence of uninsulated "dangerous voltage" within the product's enclosure, that may be of significant magnitude to constitute a risk of electric shock to persons.



The exclamation point within an equilateral triangle is intended to alert the user of the prescence of important operating and maintaining (servicing) instructions in the literature accompanying the appliance.

18. This apparatus has been equipped with a rocker-style AC mains power switch. This switch is located on the rear panel and should remain readily accessible to the user.
19. The MAINS plug or an appliance coupler is used as the disconnect device, so the disconnect device shall remain readily operable.
20. Explanation of symbol, marking, signal lamp or similar means indicates that the apparatus is completely disconnected from the mains.

WARNING — To reduce the risk of fire or electric shock, do not expose this apparatus to rain or moisture.

CAUTION – These servicing instructions are for use by qualified service personnel only. To reduce the risk of electric shock, do not perform any servicing other than that contained in the operating instructions unless you are qualified to do so.

21. **WARNING:** Please refer to the information on exterior bottom enclosure for electrical and safety information before installing or operating the apparatus.
22. The maximum ambient temperature during use of the appliance must not exceed 10–50° C // 50–122° F.
23. **NOTE:** This equipment has been tested and found to comply with the limits for a Class B digital device, pursuant to part 15 of the FCC Rules. These limits are designed to provide reasonable protection against harmful interference in a residential installation. This equipment generates, uses, and can radiate radio frequency energy and, if not installed and used in accordance with the instructions, may cause harmful interference to radio communications. However, there is no guarantee that interference will not occur in a particular installation.
If this equipment does cause harmful interference to radio or television reception, which can be determined by turning the equipment off and on, the user is encouraged to try to correct the interference by one or more of the following measures:
    - Reorient or relocate the receiving antenna.
    - Increase the separation between the equipment and the receiver.
    - Connect the equipment into an outlet on a circuit different from that to which the receiver is connected.
    - Consult the dealer or an experienced radio/TV technician for help.

    CAUTION: Changes or modifications to this device not expressly approved by LOUD Audio, LLC. could void the user's authority to operate the equipment under FCC rules.
24. This apparatus does not exceed the Class B limits for radio noise emissions from digital apparatus as set out in the radio interference regulations of the Canadian Department of Communications.

    CAN ICES-003(B)/NMB-003(B)

    ATTENTION — *Le présent appareil numérique n'émet pas de bruits radioélectriques dépassant las limites applicables aux appareils numériques de class A/de class B (selon le cas) prescrites dans le réglement sur le brouillage radioélectrique édicté par les ministere des communications du Canada.*
25.  This equipment is a Class II or double insulated electrical appliance. It has been designed in such a way that it does not require a safety connection to electrical earth.
26. This device complies with Part 15 of the FCC rules and Industry Canada's license-exempt RSS standard(s). Operation is subjected to the following two conditions:
    (1) this device may not cause harmful interference, and
    (2) this device must accept any interference received, including interference that may cause undesired operation.
27. Exposure to extremely high noise levels may cause permanent hearing loss. Individuals vary considerably in susceptibility to noise-induced hearing loss, but nearly everyone will lose some hearing if exposed to sufficiently intense noise for a period of time. The U.S. Government's Occupational Safety and Health Administration (OSHA) has specified the permissible noise level exposures shown in the following chart.

    According to OSHA, any exposure in excess of these permissible limits could result in some hearing loss. To ensure against potentially dangerous exposure to high sound pressure levels, it is recommended that all persons exposed to equipment capable of producing high sound pressure levels use hearing protectors while the equipment is in operation. Ear plugs or protectors in the ear canals or over the ears must be worn when operating the equipment in order to prevent permanent hearing loss if exposure is in excess of the limits set forth here:

Duration, per day in hours	Sound Level dBA, Slow Response	Typical Example
8	90	Duo in small club
6	92	
4	95	Subway Train
3	97	
2	100	Very loud classical music
1.5	102	
1	105	Ty screaming at Troy about deadlines
0.5	110	
0.25 or less	115	Loudest parts at a rock concert



Correct disposal of this product: This symbol indicates that this product should not be disposed of with your household waste, according to the WEEE directive (2012/19/EU) and your national law. This product should be handed over to an authorized collection site for recycling waste electrical and electronic equipment (EEE). Improper handling of this type of waste could have a possible negative impact on the environment and human health due to potentially hazardous substances that are generally associated with EEE. At the same time, your cooperation in the correct disposal of this product will contribute to the effective usage of natural resources. For more information about where you can drop off your waste equipment for recycling, please contact your local city office, waste authority, or your household waste disposal service.

Table of Contents

Important Safety Instructions 2

Table of Contents 3

Chapter 1 : Welcome 5

Introduction 5
Features 5
Things to Remember 6
About This Guide 6
Getting Started 6

Chapter 2 : CR3.5 and CR4.5 Rear Panel Features 7

Power Connector 7
Power Switch 7
Input Jacks 8
Location Switch 9
Powered Speaker Position Select Switch 9
Wire Terminals (±) 9
Custom-Tuned Rear Port 10

Chapter 3 : CR3.5 and CR4.5 Front Panel Features 11

Phones Output 11
Tone Knob 12
Mood Enhancer and Intensity Level Knobs 12
Volume Knob 12
Running Man Logo / LED 12
Input Signal Wiring 13
Care and Cleaning 13

Hookup Diagrams 14

Hookup Diagrams > Working-Playing 14
Hookup Diagrams > Recording-Playback 15

Appendix A : Service Information 16

Troubleshooting 16
Repair 17

Appendix B : Technical Information 18

Specifications 18
Dimensions 20
Block Diagram 21

Warranty Statement 22

That's All, Folks! 23

Chapter 1 : Welcome

Introduction

Hello everyone! This is the CR3.5 and CR4.5 Owner's Manual. This document contains detailed information about the CR3.5 and CR4.5 Creative Reference Powered Studio Monitors... we hope you like it!

Mackie CR3.5 and CR4.5 Creative Reference Powered Studio Monitors combine professional-quality sound with a tone shaping knob for moving from studio reference to casual listening to party mode.

Featuring a selection of inputs and switchable desktop and bookshelf modes, these speakers give you clear, powerful sound in any space.

Use the tone control knob to adjust the sound, beginning with the transparent quality you expect from professional studio monitors, then gradually adding more excitement with boom-ier bass and added sparkle.

Whether you're using them for business, pleasure or both, Mackie CR3.5 and/or CR4.5 may be the only speakers you ever need.

So there you have it. Again, we hope you like it. If you have any questions or comments about this Owner's Manual (or other Mackie documentation), please don't hesitate to contact us:

- 1-800-898-3211 (Monday through Friday, normal business hours, Pacific Time)
- www.mackie.com/support-contact

Features

- Sound-shaping tone control
- Location switch with desktop and bookshelf modes
- TRS, RCA and 3.5 mm inputs
- Built-in headphone output
- Silk dome tweeter with protective grille
- Woven woofer
    - 3.5″ woven woofer [CR3.5]
    - 4.5″ woven woofer [CR4.5]
- Size (H × W × D)
    - 8.1 × 5.5 × 7.1 in // 206 × 140 × 180 mm [CR3.5]
    - 8.9 × 6.1 × 8.3 in // 226 × 155 × 211 mm [CR4.5]
- Weight:
    - 8.2 lb / 3.7 kg [CR3.5]
    - 10.1 lb / 4.6 kg [CR4.5]

Things to Remember

- Never listen to loud music for prolonged periods.
  Please see the Safety Instructions on page 2 for information on hearing protection.
- Save the shipping boxes and packing materials! You may need them someday. Besides, the cats will love playing in them and jumping out at you unexpectedly. Remember to pretend like you are surprised!
- Save your sales receipt in a safe place.

About This Guide

This guide is designed to be accessible, with subsections as complete as practical to minimize having to electronically leaf back and forth looking for the whole story. The entire manual does not need to be read to figure out how to use CR3.5 and CR4.5.

As the saying goes, “a picture tells a 1000 words”. With that thought in mind, we added quite a few illustrations, screenshots and other images throughout to accompany the text.



This icon marks information that is critically important or unique! For your own good, read and remember them.



There’s an illustration of a microscope, so, of course, you’re going to get more detailed information when you see this little guy. There are explanations of features and practical tips listed here.



It’s a good idea to pay attention to text displayed next to a note icon, as this icon draws attention to certain features and functions relating to the usage of CR3.5 and CR4.5.

Getting Started

The following steps will help you set up the monitors quickly.
If you desire a more thorough walk-through, there is a wealth of information in the following pages!

1. Read and understand the Important Safety Instructions on page 2.
2. Make all initial connections with the power switches OFF on all equipment.
   Make sure the monitor’s volume control is all the way down.
3. Connect an 1/8″ to dual RCA (or 1/4″) cable from the output of a computer to the inputs on the rear panel of the monitor.
4. Connect black (–) and red (+) speaker wires from the powered monitor’s ± spring clips to the passive monitor’s ± spring clips.
5. Push the line cord securely into the power connector and plug the other end into a grounded outlet.
   The monitor may accept the appropriate voltage as indicated on the back panel.
6. Turn the computer on.
7. Turn the monitor on.
   [Rear panel power switch].
8. Play an audio file and slowly rotate the front panel volume control to a comfortable listening level.

Chapter 2 : CR3.5 and CR4.5 Rear Panel Features





Power Connector

Connect the detachable power cord (included in the packaging with the monitors) to the power receptacle, and plug the other end of the power cord into a live AC outlet.



Make sure that the AC outlet is matched to the AC power indicated on the rear panel (near the receptacle).

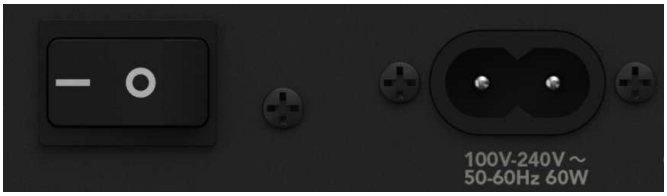

Power Switch

Press the left side of this rocker switch down to turn the monitors on. Make sure the front panel volume knob is off [fully counter-clockwise] before turning it on. Press the right side of this rocker switch down to turn the monitors off.

The ring surrounding the Running Man logo on the front panel illuminates white when the powered monitor is plugged into a live outlet, the power switch is turned on, and the front panel volume knob is turned clockwise until the monitor “clicks” on.

As a general guide, the mixer (or other signal source) should be turned on first, subwoofers next (if applicable), and monitors last. As such, the monitors should also be turned off first, followed by the subwoofers, then the mixer. This will reduce the possibility of any turn-on or turn-off thumps and other noises generated by any upstream equipment from coming out of the speakers.

Input Jacks



Connect the line-level signal from a computer, mixer, smartphone, tablet, or other signal source to one (or more) pairs of these input jacks. There are three types of input connectors to choose from:

- 1/4" line-level signals driven by balanced or unbalanced sources.
- RCA line-level signals driven by unbalanced sources.
- Stereo 1/8" line-level signal driven by an unbalanced source.



All inputs may be used simultaneously. In other words, if there is a physical connection to the 1/4" L/R line inputs, another physical connection to the RCA L/R line inputs, and yet another physical connection to the 1/8" line input, none of those inputs will be interrupted. An easy way to look at it is... there are extra inputs! These line-level connections sum together and do not override each other.



A balanced signal provides better noise rejection and is the preferred method, especially if using a cable longer than 20 feet (6 meters).

To connect balanced lines to these inputs, use a 1/4" Tip-Ring-Sleeve (TRS) plug. "TRS" stands for Tip-Ring-Sleeve, the three connection points available on a stereo 1/4" or balanced phone jack or plug. TRS jacks and plugs are used for balanced signals and are wired as follows:

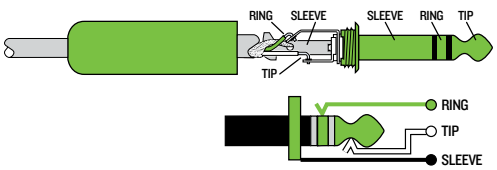

1/4" TRS Balanced Mono Wiring:

Sleeve = Shield (Ground)
Tip = Hot (+)
Ring = Cold (–)

To connect unbalanced lines to these inputs, use a 1/4" mono (TS) phone plug, wired as follows:

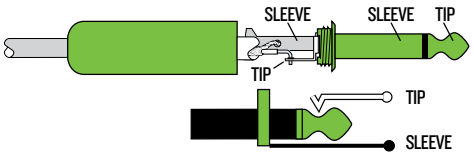

1/4" TS Unbalanced Mono Wiring:

Sleeve = Shield (Ground)
Tip = Hot (+)

The unbalanced RCA plugs are wired as follows:

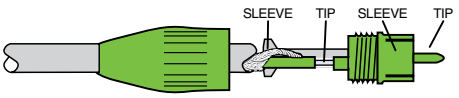

Unbalanced RCA:

Sleeve = Shield (Ground)
Tip = Hot (+)

Lastly, the unbalanced stereo 1/8" connector is wired as follows:

Unbalanced Stereo 1/8" TRS:

Sleeve = Shield (Ground)
Tip = Left Channel
Ring = Right Channel



NEVER connect the output of an amplifier directly to a CR3.5 or CR4.5's input jack. This could damage the input circuitry and we wouldn't want that now, would we?

Location Switch



What is the use case scenario for the monitors? Will you be sitting right in front of them or will they be placed further away? That's right, here you get to decide if the monitors will be positioned close to you (switch up, desktop) or further away (switch down, bookshelf).

Another way to look at it is this: if your desire is to "fill the room" (with music playback, for example), select bookshelf as it is more non-directional. However, if you will be a few feet away from the monitors (at most), then select desktop as the sound will "hit" immediately with little to no chance at room reverb.

Professional engineers use terms such as "near field" (instead of desktop) and "far field" (or even "wide field", instead of bookshelf) to describe the same thing.

Powered Speaker Position Select Switch



Here you get to decide if the powered monitor is to be positioned on the left side (switch up) or right side (switch down). One convenience is that it keeps the power cord, front and/or rear panel connections from crossing your work space. Additionally, it doesn't discriminate between right or left-handed users. Simply set it up to suit your preference.

Wire Terminals (±)

Connect the included black (–) and red (+) speaker wires from the powered monitor's ± spring clips (IMAGE A below) to the passive monitor's ± spring clips (IMAGE B below). These clips are spring-loaded. Simply press and hold one down while placing the wire inside the hole. Once complete, release the spring clip so it holds. This action shall be repeated an additional three times.

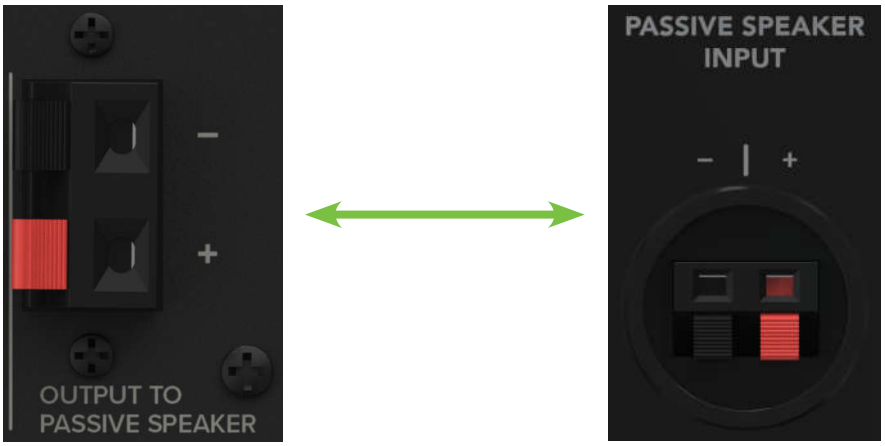

IMAGE A IMAGE B

Custom-Tuned Rear Port

The custom-tuned rear port uses the radiation from the rear of the woofer cone to extend the low-frequency response of the speaker. The size of the port is carefully designed with respect to the volume of the cabinet and the characteristics of the woofer to produce low-frequency extension.

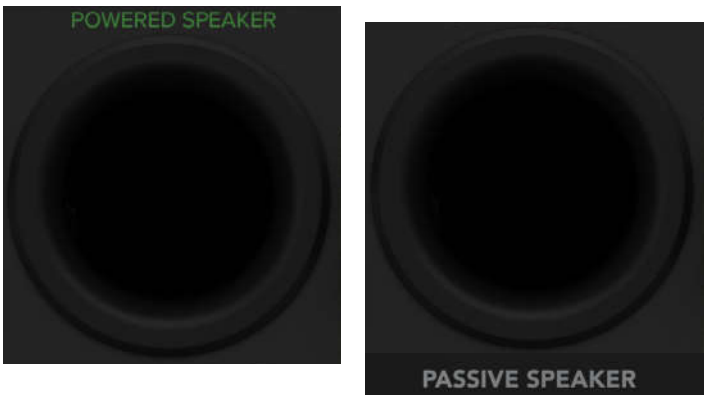

Chapter 3 : CR3.5 and CR4.5 Front Panel Features





Phones Output



This 1/8″ TRS connector supplies the output to stereo headphones. The volume is controlled with the volume knob on the front panel of the monitor. The signal to the power amp is killed when headphones are connected.

The phones output is wired as follows, according to standards specified by the AES (Audio Engineering Society):

Stereo 1/8″ TRS:

Sleeve = Shield (Ground)
Tip = Left Channel
Ring = Right Channel



Warning: The headphone amp is loud and could cause permanent hearing damage. Even intermediate levels may be painfully loud with some headphones. BE CAREFUL! Always turn the volume knob all the way down before connecting headphones. Then turn it up slowly as you listen carefully.

Tone Knob



This “tone” knob can handle anything from studio playback to watching entertaining cat videos, work video calls, general music playback, and just about anything else that you can throw at it!

The playback tone may be changed by rotating this knob. Use the tone control knob to shape the sound, starting with the transparent response you expect from studio monitors. This is when the knob is at its most counter-clockwise position.

As this knob is rotated clockwise, though, the sound is enhanced with increased bass presence and sparkly highs. In fact, at its most clockwise position, this EQ response resembles a “smiley face” curve due to the boosted high and low frequency ranges, perfect for using them as immersive gaming speakers, casual listening speakers, or all-out party speakers.

These are the two extreme settings, of course. At 12:00 o’clock, the sound is a blend between the two frequency curves, a “halfway point”, if you will. Rotate this knob until you find a sound that works best for your use case scenario.

Mood Enhancer and Intensity Level Knobs



Located below the woofer and in-between the tone knob and headphone jack are two additional knobs that work in tandem: Mood Enhancer and Intensity Level (of the mood).

Your mood may be changed by rotating this knob. At its most counter-clockwise position, this knob is off, unused. Click it on, and, unfortunately, it leads with “negative” moods: Upset, sad, gloomy, anxious, et al. As this knob is rotated clockwise, though, the mood is enhanced with increased happiness, energy, and the best medicine of all, humor!

The intensity level knob simply indicates how much of a “bump” in the mood you would like. As you might have guessed, at its most counter-clockwise position, this knob is off, unused. Click it on to raise the intensity level of the mood. It ranges from 1 (counter-clockwise) to 10 (fully clockwise).

Volume Knob



The CR3.5 and CR4.5 monitors expect a line-level signal at their input. While the input volumes are set by the devices connected to them, this knob adjusts the volume of the output coming from all inputs.

The volume knob not only adjusts the overall output level, but it also turns the monitor on and off. Simply turn the knob counter-clockwise until it “clicks” off.

Refer to the Quick Start section on page 6 for the level-setting procedure.

Running Man Logo / LED



The ring surrounding the Running Man logo on the front panel illuminates white when the monitor is plugged into a live AC outlet, the power switch is turned on, and the front panel volume control is turned clockwise until the monitor “clicks” on.



The Running Man logo / LED only illuminates on the powered monitor.
The passive monitor’s Running Man logo / LED will not illuminate.

Input Signal Wiring

Included with the CR3.5 and CR4.5 monitors are multiple accessories, including:

- 1/8″ TRS to stereo RCA cable to connect computer output to monitors.
- 1/8″ TRS to 1/8″ TRS cable to connect a smartphone or media player.
- Stereo speaker-to-speaker cable.

Even though these cables are included, they might need to be replaced at some point [e.g. cats play tug-of-war, you ran out of ribbon to tie a gift and used these instead]. Or perhaps you prefer to use the 1/4″ inputs. If so, we recommend using high-quality, shielded cables to connect the signal source to the signal input jacks on the monitors.

Three types of input connectors are provided to interface with virtually any application you may have:

- Balanced TRS / Unbalanced TS cables work well with the 1/4″ inputs.
- Unbalanced phono cables work well with the RCA inputs.
- Unbalanced TRS cables work well with the 1/8″ input.

NOTE: Route the cable away from AC power cords and outlets. These are common sources for hum in an audio signal. Wall warts and line lumps are especially insidious hum inducers!

NOTE: In certain home theater applications, it may be necessary to connect the speaker outputs from a stereo receiver to the inputs of the monitors if the receiver doesn't have preamp outputs or other line-level output connections.



CAUTION: Do not attempt to connect a speaker output directly to the input of the monitor! Speaker levels are much higher than line levels and can damage the input circuitry in the monitors.

However, it is possible to insert a speaker-level to line-level signal attenuator between the receiver's speaker output and the monitor's input. Any local authorized dealer should be able to assist, or you can build your own.

Care and Cleaning

The monitors will provide many years of reliable service if you follow these guidelines.

- Avoid exposing them to moisture.
- Avoid exposure to extreme cold (below freezing temperatures).
- Use a dry cloth to clean the cabinets. Only do this when the power is turned off and the monitor unplugged.

Hookup Diagrams

Hookup Diagrams > Working-Playing

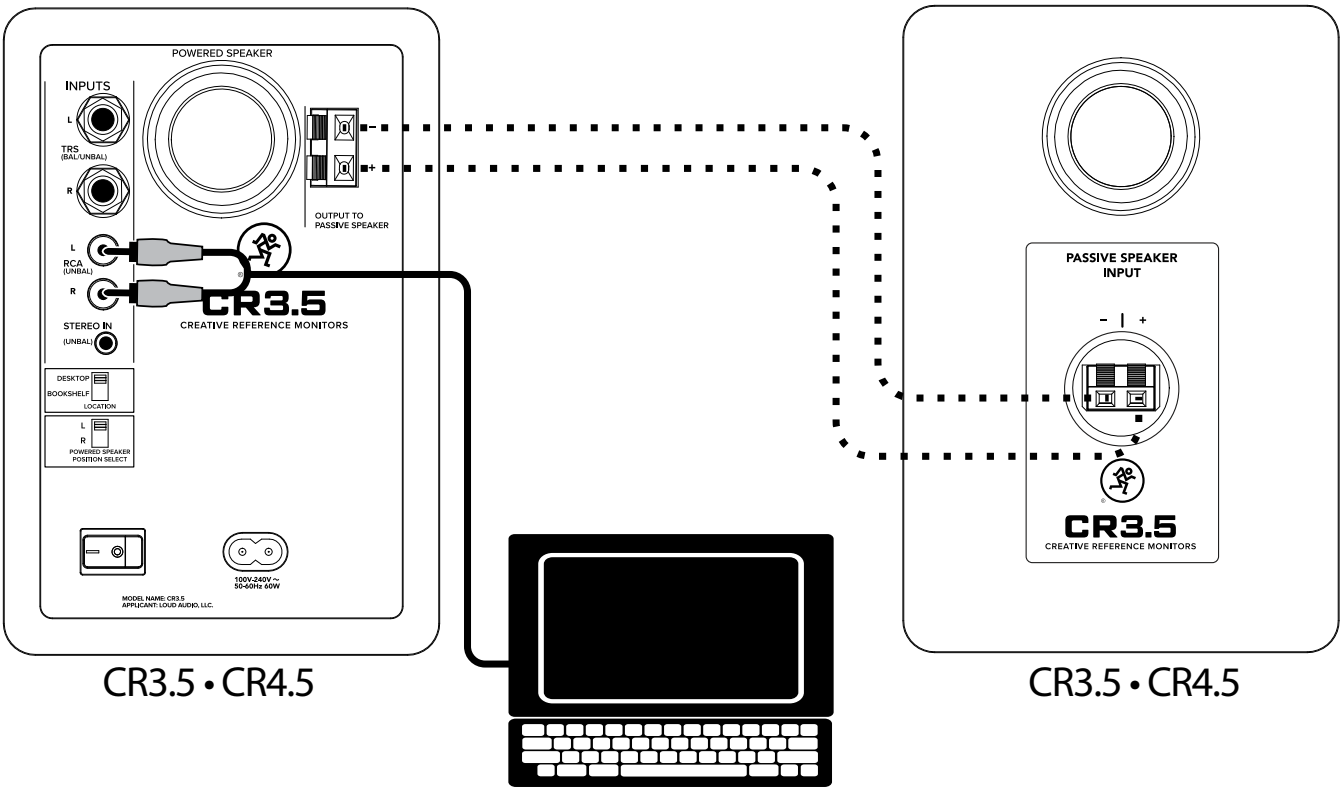

The illustration above shows a typical use for the CR3.5 and CR4.5 monitors. Everyone needs tunes while working, right... or is it just me?

In this example, simply connect the (included) cable from the computer's 1/8" output jack to the L/R RCA inputs of the powered monitor. If you prefer to use 1/4" inputs or 1/8" stereo input instead of RCA inputs, those options are available, too.

Next we'll want to connect the passive speaker. The included black (–) and red (+) speaker wires should be connected from the powered monitor's ± spring clips to the passive monitor's ± spring clips as detailed by the dotted lines above:

Connect black (–) to black (–) and red (+) to red (+).

Almost there! Move the 'Powered Speaker Position Select' switch to either the "L" or "R" position based on whether the powered reference monitor – the one with the volume knob – will be on the left or right side.

Now position the monitors where you would like them. Play audio through the computer, making sure that the volume of the computer and monitors are above "0".

Last step: move the monitors around until the optimal sound has been achieved and adjust volume and tone to taste.

Hookup Diagrams > Recording-Playback

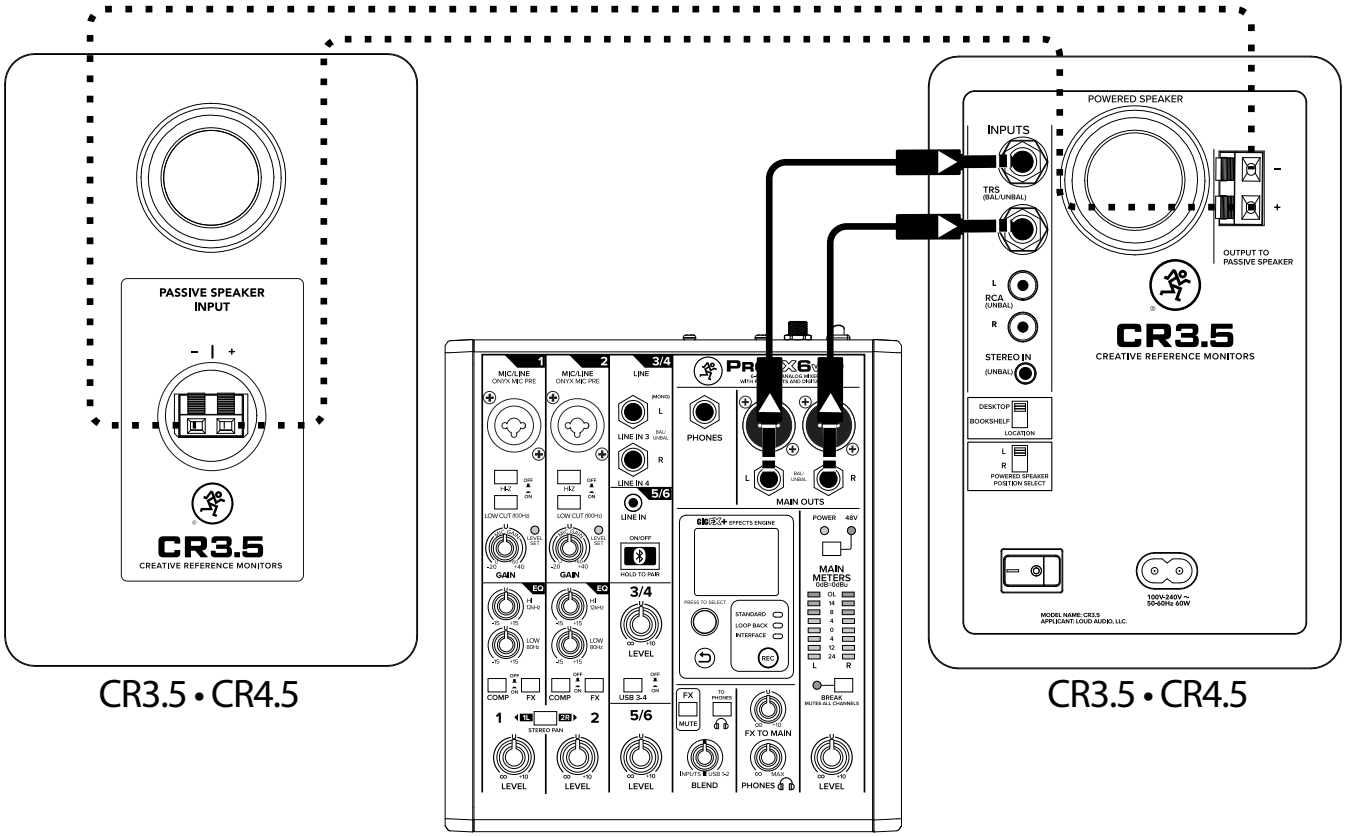

The illustration above shows another use for CR3.5 and CR4.5 monitors. Perhaps you're a home studio musician using your favorite DAW to record.

In this example, a pair of 1/4" cables is connected from the audio interface's output jacks to the 1/4" inputs on the rear panel of the powered monitor. As seen above, we're partial to utilizing Mackie's ProFX6v3+ as our USB audio interface!

Next we'll want to connect the passive speaker. The included black (–) and red (+) speaker wires should be connected from the powered monitor's ± spring clips to the passive monitor's ± spring clips as detailed by the dotted lines above:

Connect black (–) to black (–) and red (+) to red (+).

Almost there! Move the 'Powered Speaker Position Select' switch to either the "L" or "R" position based on whether the powered reference monitor – the one with the volume knob – will be on the left or right side.

Now position the monitors where you would like them. Play audio through the interface/mixer, making sure that the volume of the interface/mixer and monitors are above "0".

Last step: move the monitors around until the optimal sound has been achieved and adjust volume and tone to taste.

Optional: plugging a pair of headphones into the front panel 1/8" headphones jack auto-defeats the speaker output. The front panel volume control then controls the level going to the phones.

Appendix A : Service Information

Troubleshooting

If you think your Mackie product has a problem, please check out the following troubleshooting tips and do your best to confirm the problem. Visit the Support section of our website (www.mackie.com) to get some ideas or contact our technical support heroes. You may find the answer to the problem without having to send your Mackie product away.

Here are some useful tips that could correct any of the issues outlined below (or possibly any other issue that we haven't yet discovered):

Getting Started: If you are having any sound (or non-sound) issues, try following the level setting procedure as outlined on page 6 to verify that all of the volume controls in the system are properly adjusted.

There are no user serviceable parts. If none of these tips work, please refer to "Repair" on the next page to find out how to proceed.

No Power

- Our favorite question: Is it plugged in? Make sure the line cord is securely seated in the line cord socket and plugged all the way into the AC outlet. Make sure the AC outlet is live [check with a tester or lamp].
- Our next favorite question: Is the power switch on? If not, try turning it on.
- Is the front panel volume control "clicked" on? The power is on only when plugged into a live AC outlet, the rear panel power switch is on, and the front panel volume control is not fully counter-clockwise.
- Is the Running Man logo / LED on the front panel illuminated? If not, make sure the AC outlet is live. If so, refer to "No sound" below.
- The internal AC line fuse may be blown. This is not a user serviceable part. If you suspect the AC line fuse is blown, please see the "Repair" section next.

No Sound

- Is the level knob for the input source turned all the way down? Verify that all the volume controls in the system are properly adjusted.
- Is the signal source turned up? Make sure the connecting cables are in good repair and securely connected at both ends. Make sure the signal level from the computer, mixer, MP3 player, phone (or whatever device immediately precedes the monitors) is high enough to produce sound.

Poor sound

- Is it loud and distorted? Make sure that you're not overdriving a stage in the signal chain. Verify that all level controls are set properly.
- Is the input connector plugged completely into the jack? Be sure all connections are secure.
- Too much bass or not enough bass? Move around the room and see if the bass response changes. It's possible that your listening position coincides with a room mode where the low frequencies either become exaggerated or nulled. If so, try moving the monitors to a different position, or moving your listening position.

Noise / Hum / Buzz

- Check the signal cable between the computer/mixer/MP3 player/phone and the monitor.
  Make sure all connections are secure. These problems usually produce crackling noises, hum, or buzz.
- If connecting an unbalanced output to the monitor's balanced input, make sure the shield is connected to the unbalanced ground of the source.
- Make sure the signal cable is not routed near AC cables, power transformers, or other EMI sources (including wall warts and line lumps!). These sources usually produce hum.
- Is there a light dimmer or other triac-based device on the same AC circuit as the monitor?
  Dimmers cause buzzing noises. Use an AC line filter or plug the monitor into a different AC circuit.
- Excessive hiss is an indication of an incorrect gain setting somewhere before the speaker.
- If possible, listen to the signal source with headphones plugged in. If it sounds noisy there, it's not the monitor.

Try some of the following troubleshooting ideas:

- Use balanced connections throughout your system for the best noise rejection.
- Whenever possible, plug all the audio equipment's line cords into outlets which share a common ground.
  The distance between the outlets and the common ground should be as short as possible.

Other Issues

- Please email or call Technical Support if you are having any other issue not listed here:
  - mackie.com/support-contact
  - 1-800-898-3211

Repair

For warranty service, refer to the warranty information on page 22.

Non-warranty service for Mackie products is available at a factory-authorized service center. To locate the nearest service center, visit www.mackie.com, click "Support" and select "Service Center Locater". Service for Mackie products living outside the United States can be obtained through local dealers or distributors.

If you do not have access to our website, you can call our Tech Support department at 1-800-898-3211, Monday-Friday during normal business hours, Pacific Time, to explain the problem. Tech Support will tell you where the nearest factory-authorized service center is located in your area.

Appendix B : Technical Information

Specifications

Acoustic Performance

Frequency Response (–10 dB): ..... 60 Hz – 20 kHz [CR3.5]
55 Hz – 20 kHz [CR4.5]

Frequency Response (–3 dB): ..... 70 Hz – 20 kHz [CR3.5]
65 Hz – 20 kHz [CR4.5]

Maximum SPL Peak: ..... 100 dB [CR3.5]
101 dB [CR4.5]

Crossover Frequency ..... 3.0 kHz

Transducers

Low Frequency: ..... 3.5 in / 89 mm [CR3.5]
4.5 in / 114 mm [CR4.5]
woven woofer

High Frequency: ..... 1.0 in / 25 mm
silk-dome tweeter with protective grille

Power Amplifiers

System Power Amplification
Rated Power: ..... 50 watts RMS
Design: ..... Class AB

Input / Output

Input Type ..... Female 1/4″ TRS balanced–unbalanced,
RCA unbalanced, 1/8″ stereo unbalanced

Input Impedance ..... 10 kΩ

Output Type ..... 1/8″ Stereo Headphones

Line Input Power

Detachable line cord ..... 100V–240V~, 50–60 Hz, 60W

Construction Features

Basic Design	Rectangular
Enclosure Construction	Solid MDF
Finish	Black Vinyl Wrap
Port Configuration	Custom-tuned rear port tube
Display LED	Power ring (surrounding the Running Man logo)
Operating Temperature	10 – 50 ˚C 50 – 122 ˚F

Pets

Dogs:	Bulldog, Terrier, Spaniel, Shepherd, Beagle, Retriever, Husky, Hound Dog, Chihuahua, Poodle, Dachshund, Rottweiler, Great Dane, St. Bernard, Shih Tzu, etc.
Cats:	Tabby, Siamese, Maine Coon, Persian, Burmese, Grumpy, Himalayan, Snowshoe, etc.
Fish:	Goldfish, Neon Tetra, Catfish, Angelfish, Guppy, Clownfish, etc.
Birds:	Parakeet, Canary, Finch, Macaw, Dove, Cockatoo, Budgie, etc.
Other:	Rabbit, Horse, Snake, Gerbil/Hamster, etc.

Physical Properties

CR3.5 size (H x W x D):	8.1 × 5.5 × 7.1 in // 206 × 140 × 180 mm
CR3.5 weight:	8.2 lb // 3.7 kg
CR4.5 size (H x W x D):	8.9 × 6.1 × 8.3 in // 226 × 155 × 211 mm
CR4.5 weight:	10.1 lb // 4.6 kg

About

Part Number, Rev and Date:	SW1475, Rev A, October 2024

Disclaimer

LOUD Audio, LLC. is always striving to improve our products by incorporating new and improved materials, components, and manufacturing methods. Therefore, we reserve the right to change these specifications at any time without notice. The “Running Man” is a registered trademark of LOUD Audio, LLC. All other brand names mentioned are trademarks or registered trademarks of their respective holders, and are hereby acknowledged.

Please check our website for any updates to this Owner’s Manual: www.mackie.com.
©2024 LOUD Audio, LLC. All right All right All rights reserved.

CR3.5 Dimensions

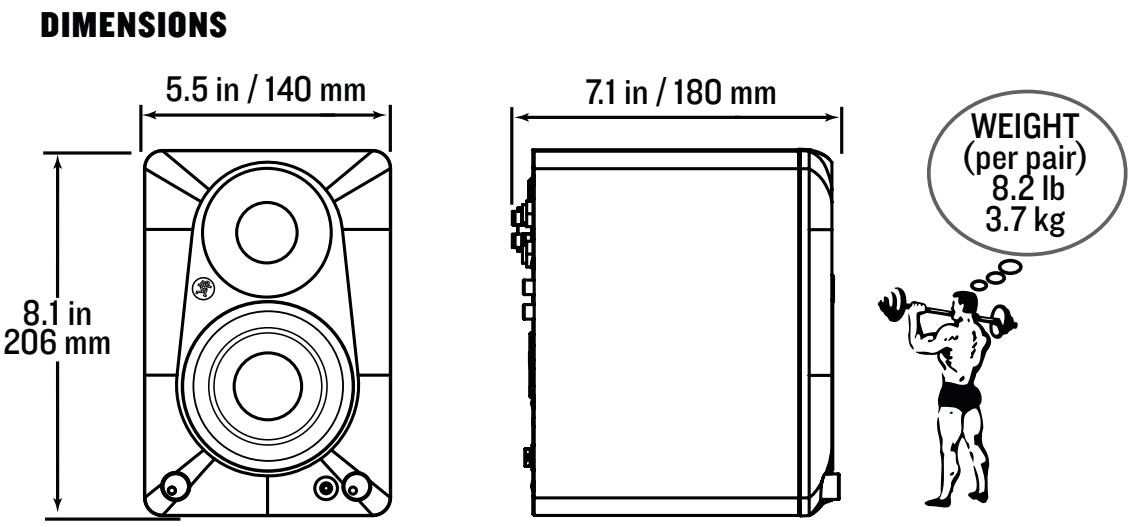

CR4.5 Dimensions

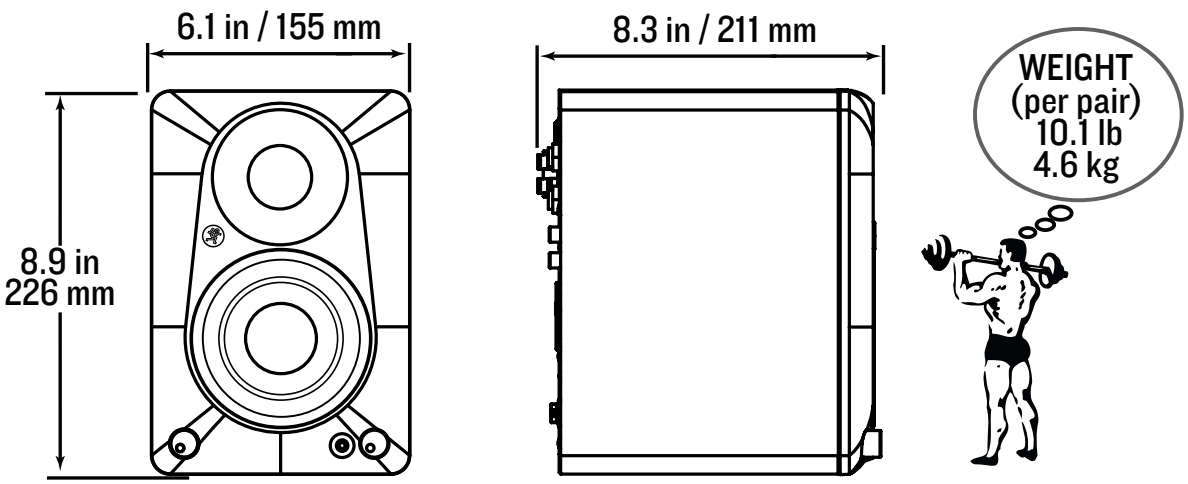

CR3.5 and CR4.5 Block Diagram

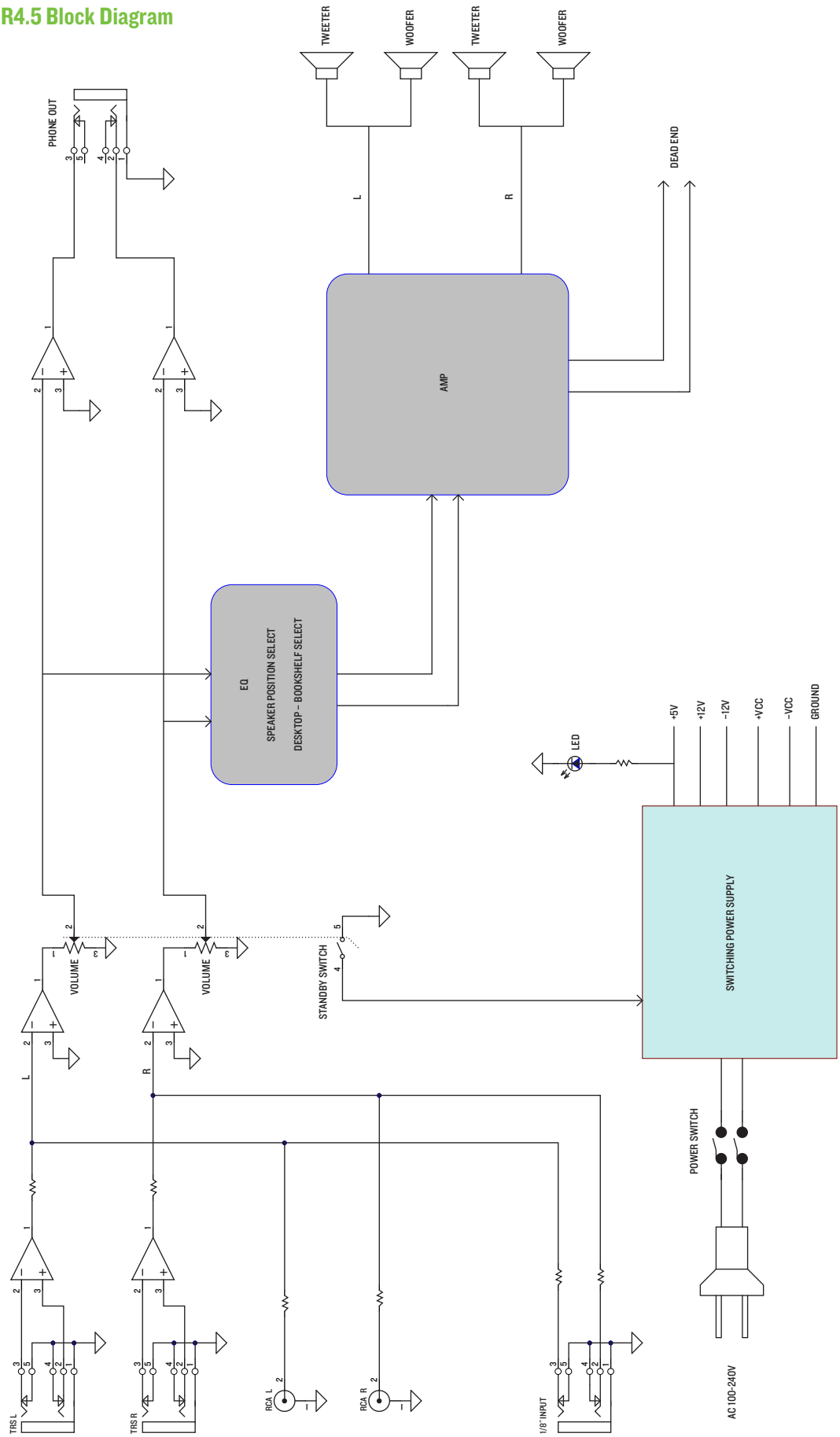

Warranty Statement

Please keep your sales receipt in a safe place.

This Limited Product Warranty ("Product Warranty") is provided by LOUD Audio, LLC. ("LOUD") and is applicable to products purchased in the United States or Canada through a LOUD-authorized reseller or dealer. The Product Warranty will not extend to anyone other than the original purchaser of the product (hereinafter, "Customer," "you" or "your").

For products purchased outside the U.S. or Canada, please visit www.mackie.com/warranty to find contact information for your local distributor, and information on any warranty coverage provided by the distributor in your local market.

LOUD warrants to Customer that the product will be free from defects in materials and workmanship under normal use during the Warranty Period. If the product fails to conform to the warranty then LOUD or its authorized service representative will at its option, either repair or replace any such nonconforming product, provided that Customer gives notice of the noncompliance within the Warranty Period to the Company at: www.mackie.com/support or by calling LOUD technical support at 1.800.898.3211 (toll-free in the U.S. and Canada) during normal business hours Pacific Time, excluding weekends or LOUD holidays. Please retain the original dated sales receipt as evidence of the date of purchase. You will need it to obtain any warranty service.

For full terms and conditions, as well as the specific duration of the Warranty for this product, please visit www.mackie.com/warranty.

The Product Warranty, together with your invoice or receipt, and the terms and conditions located at www.mackie.com/warranty constitutes the entire agreement, and supersedes any and all prior agreements between LOUD and Customer related to the subject matter hereof. No amendment, modification or waiver of any of the provisions of this Product Warranty will be valid unless set forth in a written instrument signed by the party to be bound thereby.

Need help with the monitors?

- **Visit www.mackie.com/support to find: FAQs, manuals, addendums, and other documents.**
- **Email us at: www.mackie.com/support-contact**
- **Telephone 1-800-898-3211 to speak with one of our splendid technical support chaps (Monday through Friday, normal business hours, Pacific Time).**

Please write the serial numbers here for future reference
(i.e., insurance claims, tech support, return authorization, make dad proud, etc.)

Purchased at:

Date of purchase:



19820 North Creek Parkway #201, Bothell, WA 98011 • USA
Phone: 425.487.4333 • Toll-free: 800.898.3211
Fax: 425.487.4337 • www.mackie.com

MACKIE.