HIKVISION®
HiWatch Series

HWI-T240HA-LUF/SL
4 MP Fixed Turret Network Camera

- High quality imaging with 4 MP resolution
- Support Human and Vehicle Detection
- Smart Smart Hybrid Light: advanced technology with long range
- Efficient H.265+ compression technology
- Support on-board storage up to 512 GB (SD card slot)
- Provide real-time security via built-in two-way audio
- Water and dust resistant (IP67)

▪ Specification

Camera	
Image Sensor	1/3" Progressive Scan CMOS
Max. Resolution	2560 × 1440
Min. Illumination	Color: 0.005 Lux @ (F1.6, AGC ON), B/W: 0 Lux with IR
Shutter Time	1/3 s to 1/100, 000 s
Day & Night	IR cut filter
Angle Adjustment	Pan: 0° to 360°, tilt: 0° to 75°, rotate: 0° to 360°
Lens	
Lens Type	Fixed focal lens, 2.8 and 4 mm optional
Focal Length & FOV	2.8 mm, horizontal FOV 98°, vertical FOV 54°, diagonal FOV 114° 4 mm, horizontal FOV 78°, vertical FOV 42°, diagonal FOV 93°
Lens Mount	M12
Iris Type	Fixed
Aperture	F1.6
DORI	
DORI	2.8 mm, D: 63 m, O: 25 m, R: 12 m, I: 6 m 4 mm, D: 78 m, O: 31 m, R: 15 m, I: 7 m
Illuminator	
Supplement Light Type	IR, White Light
Supplement Light Range	Up to 30 m
Smart Supplement Light	Yes
IR Wavelength	850 nm
Video	
Main Stream	50 Hz: 20 fps (2560 × 1440) 25 fps (1920 × 1080, 1280 × 720) 60 Hz: 20 fps (2560 × 1440) 24 fps (1920 × 1080, 1280 × 720)
Sub-Stream	50 Hz: 25 fps (1280 × 720, 640 × 480, 640 × 360) 60 Hz: 24 fps (1280 × 720, 640 × 480, 640 × 360)
Video Compression	Main stream: H.265+/H.265/H.264+/H.264, Sub-stream: H.265/H.264/MJPEG
Video Bit Rate	32 Kbps to 8 Mbps
H.264 Type	Baseline Profile, Main Profile, High Profile
H.265 Type	Main Profile
Bit Rate Control	CBR, VBR
Region of Interest (ROI)	1 fixed region for main stream
Scalable Video Coding (SVC)	H.264 and H.265 encoding
Audio	
Audio Type	Mono sound
Audio Sampling Rate	8 kHz/16 kHz
Environment Noise Filtering	Yes
Audio Compression	G.711/G.722.1/G.726/MP2L2/PCM/AAC-LC

Audio Bit Rate	64 Kbps (G.711ulaw/G.711alaw)/16 Kbps (G.722.1)/16 Kbps (G.726)/32 to 192 Kbps (MP2L2)/16 to 64 Kbps (AAC-LC)
Network	
Security	Password protection, complicated password, watermark, basic and digest authentication for HTTP, WSSE and digest authentication for Open Network Video Interface, security audit log, host authentication (MAC address)
Simultaneous Live View	Up to 6 channels
API	Open Network Video Interface (Profile S, Profile T, Profile G), ISAPI, SDK
Protocols	TCP/IP, ICMP, DHCP, DNS, HTTP, RTP, RTSP, RTCP, NTP, IGMP, IPv4, IPv6, UDP, QoS, FTP, SMTP
User/Host	Up to 32 users 3 user levels: administrator, operator, and user
Client	iVMS-4200, Hik-Connect
Web Browser	Plug-in required live view: IE 10, IE 11, Local service: Chrome 57.0+, Firefox 52.0+, Edge 89+
Image	
Wide Dynamic Range (WDR)	120 dB
SNR	≥ 52 dB
Day/Night Switch	Day, Night, Auto, Schedule
Image Enhancement	BLC, HLC, 3D DNR
Image Settings	Rotate mode, saturation, brightness, contrast, sharpness, gain, white balance, adjustable by client software or web browser
Privacy Mask	4 programmable rectangle privacy masks
Interface	
Ethernet Interface	1 RJ45 10 M/100 M self-adaptive Ethernet port
On-Board Storage	Built-in memory card slot, support microSD/microSDHC/microSDXC card, up to 512 GB
Built-in Microphone	Yes, 1 built-in microphone
Built-in Speaker	Max. power consumption: 1.5 W, max. sound pressure level: 10 cm: 95 dB.
Reset Key	Yes
Event	
Basic Event	Motion detection (support alarm triggering by specified target types (human and vehicle)), video tampering alarm, exception
Linkage	Upload to FTP/memory card, notify surveillance center, send email, trigger recording, trigger capture, audible warning, flashing light
General	
Power	12 VDC ± 25%, 0.66 A, max. 8 W, Ø5.5 mm coaxial power plug, reverse polarity protection, PoE: IEEE 802.3af, Class 3, max. 9.5 W
Material	Metal & Plastic
Dimension	Ø110 mm × 102.7 mm (Ø4.33" × 4.04")
Package Dimension	150 mm × 150 mm × 141 mm (5.9" × 5.9" × 5.6")
Weight	Approx. 340 g (0.7 lb.)
With Package Weight	Approx. 560 g (1.2 lb.)
Storage Conditions	-30 °C to 60 °C (-22 °F to 140 °F). Humidity 95% or less (non-condensing)
Startup and Operating Conditions	-30 °C to 60 °C (-22 °F to 140 °F). Humidity 95% or less (non-condensing)

Language	English, Ukrainian
General Function	Heartbeat, anti-banding, mirror, password protection, password reset via email
Flashing Light	Yes
Approval	
EMC	CE-EMC: EN 55032:2015+A1:2020, EN 50130-4:2011+A1:2014, EN IEC 61000-3-2:2019+A1:2021, EN 61000-3-3:2013+A1:2019+A2:2021
Safety	CE-LVD: EN 62368-1: 2014/A11: 2017
Environment	CE-RoHS: 2011/65/EU, WEEE: 2012/19/EU, Reach: Regulation (EC) No 1907/2006
Protection	IP67: IEC 60529-2013

▪ Typical Application

Hikvision products are classified into three levels according to their anti-corrosion performance. Refer to the following description to choose for your using environment.

This model has NO SPECIFIC PROTECTION.

Level	Description
Top-level protection	Hikvision products at this level are equipped for use in areas where professional anti-corrosion protection is a must. Typical application scenarios include coastlines, docks, chemical plants, and more.
Moderate protection	Hikvision products at this level are equipped for use in areas with moderate anti-corrosion demands. Typical application scenarios include coastal areas about 2 kilometers (1.24 miles) away from coastlines, as well as areas affected by acid rain.
No specific protection	Hikvision products at this level are equipped for use in areas where no specific anti-corrosion protection is needed.

▪ Available Model

HWI-T240HA-LUF/SL(2.8mm)

HWI-T240HA-LUF/SL(4mm)

▪ Dimension

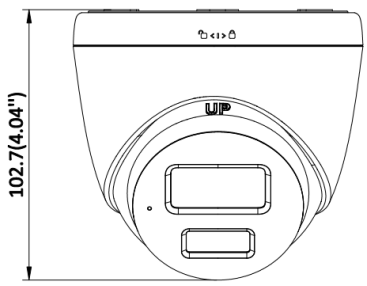

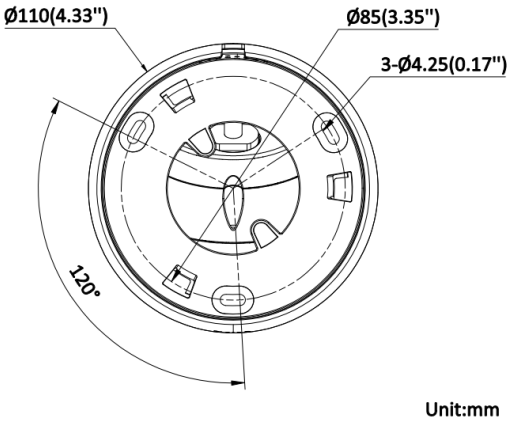

▪ Accessory

▪ Optional

DS-1272ZJ-110-TRS Wall mount	DS-1275ZJ-SUS Vertical pole mount	DS-1276ZJ-SUS Corner mount	DS-1280ZJ-S Junction box	DS-1281ZJ-S Inclined ceiling mount
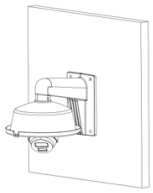	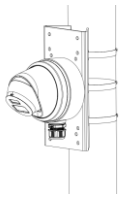	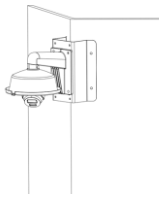		

DS-1280ZJ-TR13 Junction box	DS-1271ZJ-110-TRS DS-1271ZJ-110-TRS

Headquarters
No.555 Qianmo Road, Binjiang District,
Hangzhou 310051, China
T +86-571-8807-5998
www.hikvision.com

Follow us on social media to get the latest product and solution information.

Hikvision HikvisionHQ HikvisionHQ Hikvision_Global Hikvision Corporate Channel hikvisionhq

© Hangzhou Hikvision Digital Technology Co., Ltd. Unless otherwise agreed, Hikvision makes no warranties, express or implied. We reserve the right to introduce modifications without notice.